Roland

CAMM-1 PRO

Sign Maker by Roland DG Corporation

GX-640
GX-500
GX-400
GX-300

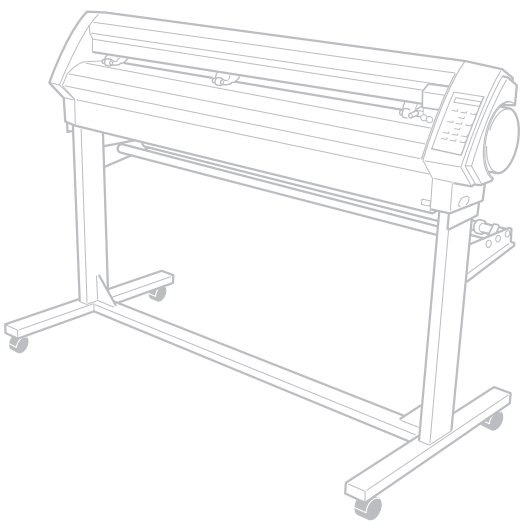

User's Manual

Thank you very much for purchasing this product.

- To ensure correct and safe usage with a full understanding of this product's performance, please be sure to read through this manual completely and store it in a safe location.
- Unauthorized copying or transferral, in whole or in part, of this manual is prohibited.
- The contents of this operation manual and the specifications of this product are subject to change without notice.
- The operation manual and the product have been prepared and tested as much as possible. If you find any misprint or error, please inform us.
- Roland DG Corp. assumes no responsibility for any direct or indirect loss or damage which may occur through use of this product, regardless of any failure to perform on the part of this product.
- Roland DG Corp. assumes no responsibility for any direct or indirect loss or damage which may occur with respect to any article made using this product.

Roland DG Corporation

For the USA

FEDERAL COMMUNICATIONS COMMISSION RADIO FREQUENCY INTERFERENCE STATEMENT

This equipment has been tested and found to comply with the limits for a Class A digital device, pursuant to Part 15 of the FCC Rules.
These limits are designed to provide reasonable protection against harmful interference when the equipment is operated in a commercial environment.
This equipment generates, uses, and can radiate radio frequency energy and, if not installed and used in accordance with the instruction manual, may cause harmful interference to radio communications.
Operation of this equipment in a residential area is likely to cause harmful interference in which case the user will be required to correct the interference at his own expense.

Unauthorized changes or modification to this system can void the users authority to operate this equipment.

Use only I/O cables that have been designed and manufactured specifically for this device.

For Canada

NOTICE

This Class A digital apparatus meets all requirements of the Canadian Interference-Causing Equipment Regulations.

AVIS

Cet appareil numérique de la classe A respecte toutes les exigences du Règlement sur le matériel brouilleur du Canada.

For California

WARNING

This product contains chemicals known to cause cancer, birth defects and other reproductive harm.

For EU Countries

WARNING

This is a Class A product. In a domestic environment this product may cause radio interference in which case the user may be required to take adequate measures.

NOTICE

Grounding Instructions

In the event of a malfunction or breakdown, grounding provides a path of least resistance for electric current to reduce the risk of electric shock. This tool is equipped with an electric cord having an equipment-grounding conductor and a grounding plug. The plug must be plugged into a matching outlet that is properly installed and grounded in accordance with all local codes and ordinances.

Do not modify the plug provided - if it will not fit the outlet, have the proper outlet installed by a qualified electrician.

Improper connection of the equipment-grounding conductor can result in a risk of electric shock. The conductor with insulation having an outer surface that is green with or without yellow stripes is the equipment-grounding conductor. If repair or replacement of the electric cord or plug is necessary, do not connect the equipment-grounding conductor to a live terminal.

Check with a qualified electrician or service personnel if the grounding instructions are not completely understood, or if in doubt as to whether the tool is properly grounded.

Use only 3-wire extension cords that have 3-prong grounding plugs and 3-pole receptacles that accept the tool's plug.

Repair or replace damaged or worn out cord immediately.

Operating Instructions

KEEP WORK AREA CLEAN. Cluttered areas and benches invites accidents.

DON'T USE IN DANGEROUS ENVIRONMENT. Don't use power tools in damp or wet locations, or expose them to rain. Keep work area well lighted.

DISCONNECT TOOLS before servicing; when changing accessories, such as blades, bits, cutters, and like.

REDUCE THE RISK OF UNINTENTIONAL STARTING. Make sure the switch is in off position before plugging in.

USE RECOMMENDED ACCESSORIES. Consult the owner's manual for recommended accessories. The use of improper accessories may cause risk of injury to persons.

NEVER LEAVE TOOL RUNNING UNATTENDED. TURN POWER OFF. Don't leave tool until it comes to a complete stop.

For EU Countries

CE

Manufacturer:
ROLAND DG CORPORATION
1-6-4 Shinmiyakoda, Kita-ku, Hamamatsu-shi, Shizuoka-ken, 431-2103 JAPAN

The authorized representative in the EU:
Roland DG Corporation, German Office Halskestrasse 7, 47877 Willich, Germany

Table of Contents

Table of Contents 1
⚠ To Ensure Safe Use 4
⚠ Pour utiliser en toute sécurité 10
Important Notes on Handling and Use 16

Chapter 1 Getting Started 17

Part Names and Functions 18
- Front 18
- Rear 19
- Operation Panel 20

Menu List 21
- Menu List 21

Chapter 2 Basic Operation 25

Loading the Material (Roll Material) 26
- Acceptable Material Width and Maximum Cutting Width 26
- Loading Roll Material 26

Installing a Blade / Adjustment of a Blade 35
- Installing a Blade 35
- Cutting Test 36
- Adjusting the Blade Force 38
- Adjusting the Cutting Speed 39

Starting / Quitting Cutting 40
- Setting the Origin Point 40
- Material Test Feed 40
- Downloading Cutting Data 41
- To Sever the Material 41
- Pausing and Resuming Cutting 41
- To Change the Cutting Speed or Blade Force During Cutting 42
- When Cutting is Completed 42

Chapter 3 Part of Practice 45

Detailed Cutting-condition Settings 46
- Adjusting the Blade Extension 46
- Adjusting the Blade Offset 47
- Changing the Speed When Raised (Up Speed) 47
- Settings for Cutting Quality 48

Details of the Origin-point Location and Cutting Area 49
- The Location of the Origin Point Immediately After Loading Material 49
- Coordinate Rotation Settings 51
- About the Cutting Area 52

To Perform Lengthy Cutting 53
- Lengthy Cutting: Points to Remember 53
- Lengthy Cutting: Loading Material 53

Repeating the Same Cutting 56
- Repeating the Same Cutting 56

Front Loading 57
- What is the Front Loading 57
- Loading Material 57

Setting the Cutting Area Using the Operation Panel 58
Setting the Cutting Area Using the CAMM-1 Driver 59
The Overcut Feature 61
About the Overcut Feature 61
Setting Overcutting to [ENABLE] 61
The Memory Feature 62
About the Memory Feature 62
To Store in Memory 62
Calling Up 63
Deleting Settings 63
The Crop Mark Feature 64
About the Crop Mark Feature 64
Using the Included Program 64
Using a Program Other Than the Included Program 65
If the Printing and Cutting Positions Are Misaligned 68
Performing Test Feed of Material Automatically 69
Performing Test Feed of Material Automatically 69
Using Various Kind of the Materials 70
Using the Cut Material 70
Using the Material Easy to be Winkled/Hard to be Fed 71
Important Note and Advice in Using Special Material 72

Chapter 4 Maintenance / FAQ 73

Maintenance 74
Cleaning 74
Consumable Items 75
How to Replace the Separating Knife 76
Self-test Operation Check 77
What to Do If 78
The Machine Doesn't Run 78
Cut Lines Are Uneven or Not Cut Attractively. 79
Uncut Areas Remain or the Material Is Not Cut 79
The Carrier Paper Is Cut 80
The Material Rise Up During Cutting, and the Blade Scratches the Material 80
The Start and End Points for Cutting Are Not Same 80
Blank Areas Are Produced On the Material 80
Flat Material Cannot be Set Up As "PIECE" (the length is not displayed) 81
The Material Slips Away From the Pinch Rollers During the Cutting Process 81
A Message Appears 82
Responding to an Error Message 82

Chapter 5 Main Specifications 85

Selecting the Material and Blade 86
Material and Blade Combinations 86

List of Functions 87
Control-key Functions 87
Description of Menu Items 88
Locations of the Power Rating and Serial Number Labels 93
Locations of the Power Rating and Serial Number Labels 93
Interface Specifications 94
Serial 94
USB 94
Serial connector 94
USB connector 95
XY-RS-34 serial cable connection 95
Specifications 96

This document is the setup guide for four models: GX-640/500/400/300.
Also, most of the figures in this document depict the GX-500

Company names and product names are trademarks or registered trademarks of their respective holders.

Copyright © 2010 Roland DG Corporation

⚠ To Ensure Safe Use

Improper handling or operation of this machine may result in injury or damage to property. Points which must be observed to prevent such injury or damage are described as follows.

About ⚠ WARNING and ⚠ CAUTION Notices

⚠ **WARNING**	Used for instructions intended to alert the user to the risk of death or severe injury should the unit be used improperly.
⚠ **CAUTION**	Used for instructions intended to alert the user to the risk of injury or material damage should the unit be used improperly. Note: Material damage refers to damage or other adverse effects caused with respect to the home and all its furnishings, as well to domestic animals or pets.

About the Symbols

	The △ symbol alerts the user to important instructions or warnings. The specific meaning of the symbol is determined by the design contained within the triangle. The symbol at left means "danger of electrocution."
	The ⃠ symbol alerts the user to items that must never be carried out (are forbidden). The specific thing that must not be done is indicated by the design contained within the circle. The symbol at left means the unit must never be disassembled.
	The ● symbol alerts the user to things that must be carried out. The specific thing that must be done is indicated by the design contained within the circle. The symbol at left means the power-cord plug must be unplugged from the outlet.

⚠ Incorrect operation may cause injury

⚠ WARNING

Be sure to follow the operation procedures described in this documentation. Never allow anyone unfamiliar with the usage or handling of the machine to touch it.
Incorrect usage or handling may lead to an accident.

Keep children away from the machine.
The machine includes areas and components that pose a hazard to children and may result in injury, blindness, choking, or other serious accident.

Never operate the machine while tired or after ingesting alcohol or any medication.
Operation requires unimpaired judgment. Impaired judgment may result in an accident.

Never use the machine for any purpose for which it is not intended, or use the machine in an undue manner that exceeds its capacity.
Doing so may result in injury or fire.

For accessories (optional and consumable items, power cord, and the like), use only genuine articles compatible with this machine.
Incompatible items may lead to an accident.

Before attempting cleaning, maintenance, or attachment or detachment of optional items, disconnect the power cord.
Attempting such operations while the machine is connected to a power source may result in injury or electrical shock.

⚠ WARNING

Never attempt to disassemble, repair, or modify the machine.
Doing so may result in fire, electrical shock, or injury. Entrust repairs to a trained service technician.

⚠ CAUTION

Exercise caution to avoid being pinched or becoming caught.
Inadvertent contact with certain areas may cause the hand or fingers to be pinched or become caught. Use care when performing operations.

Never attempt operation while wearing a necktie, necklace, or loose clothing. Bind long hair securely.
Such items may become caught in the machine, resulting in injury.

Conduct operations in a clean, brightly lit location.
Working in a location that is dark or cluttered may lead to an accident, such as becoming caught in the machine as the result of an inadvertent stumble.

Never climb or lean on the machine.
The machine is not made to support a person. Climbing or leaning on the machine may dislodge components and cause a slip or fall, resulting in injury.

Caution: cutting tool.
This machine has an internal tool. To avoid injury, handle the tool with care.

⚠ Danger of electrical short, shock, electrocution, or fire

⚠ WARNING

Connect to an electrical outlet that complies with this machine's ratings (for voltage, frequency, and current).
Incorrect voltage or insufficient current may cause fire or electrical shock.

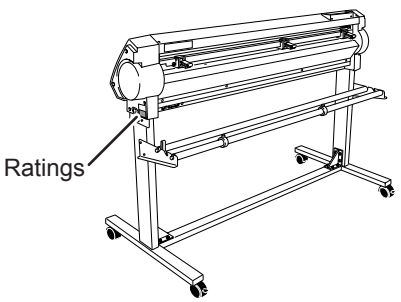

Never use out of doors or in any location where exposure to water or high humidity may occur. Never touch with wet hands.
Doing so may result in fire or electrical shock.

Never allow any foreign object to get inside. Never expose to liquid spills.
Inserting objects such as coins or matches or allowing beverages to be spilled into the ventilation ports may result in fire or electrical shock. If anything gets inside, immediately disconnect the power cord and contact your authorized Roland DG Corp. dealer.

Never place any flammable object nearby. Never use a combustible aerosol spray nearby. Never use in any location where gases can accumulate.
Combustion or explosion may be a danger.

⚠ WARNING

Handle the power cord, plug, and electrical outlet correctly and with care. Never use any article that is damaged.
Using a damaged article may result in fire or electrical shock.

When using an extension cord or power strip, use one that adequately satisfies the machine's ratings (for voltage, frequency, and current).
Use of multiple electrical loads on a single electrical outlet or of a lengthy extension cord may cause fire.

Connect to ground.
This can prevent fire or electrical shock due to current leakage in the event of malfunction.

Position so that the power plug is within immediate reach at all times.
This is to enable quick disconnection of the power plug in the event of an emergency. Install the machine next to an electrical outlet. Also, provide enough empty space to allow immediate access to the electrical outlet.

If sparking, smoke, burning odor, unusual sound, or abnormal operation occurs, immediately unplug the power cord. Never use if any component is damaged.
Continuing to use the machine may result in fire, electrical shock, or injury. Contact your authorized Roland DG Corp. dealer.

⚠ Important notes about the power cord, plug, and electrical outlet

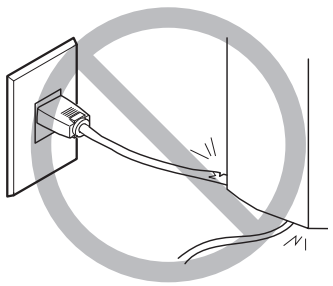

Never place any object on top or subject to damage.

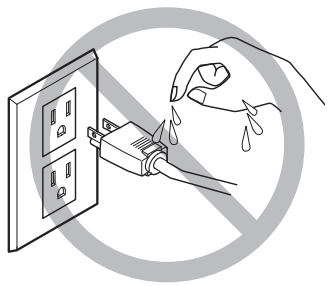

Never allow to get wet.

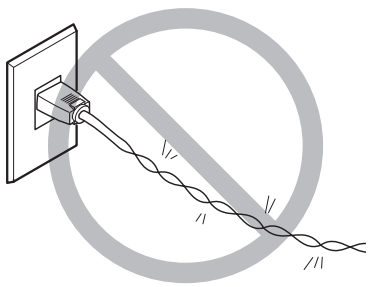

Never bend or twist with undue force.

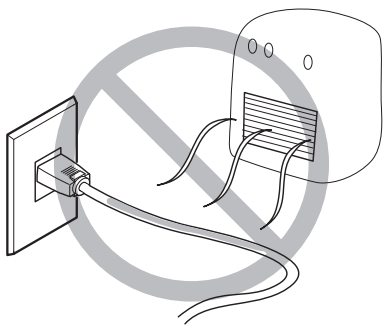

Never make hot.

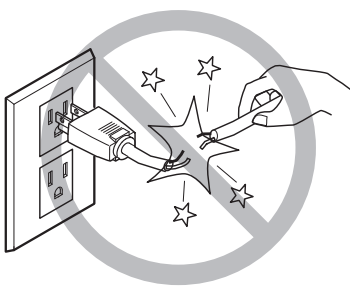

Never pull with undue force.

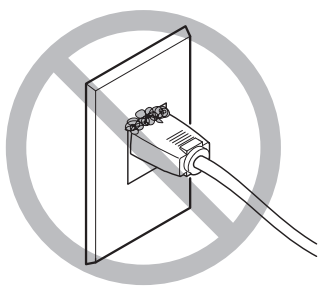

Dust may cause fire.

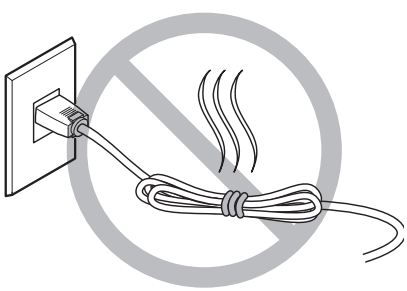

Never bundle, bind, or roll up.

⚠ The total weigh of this machine reaches about 70kg (154 lb.).

⚠ WARNING

Install the machine in a location that is level, stable, and able to bear the weight of the machine.
The total weight of the machine may reach about 70 kg (154 lb.) or more for the GX-640 (, about 60 kg (132 lb.) or more for the GX-500, about 55 kg (121 lb.) or more for the GX-400, about 50 kg (110 lb.) or more for the GX-300). Installation in an unsuitable location may cause a major accident, including tip over, fall, or collapse.

Unloading and emplacement are operations that must be performed by 4 persons or more.
Tasks that require undue effort when performed by a small number of persons may result in physical injury. Also, if dropped, such items may cause injury.

Be sure to lock the stand's casters.
If the machine should begin to topple, a major accident may result, including crushing of the appendages or the body.

⚠ WARNING

When storing roll media, implement adequate safety measures to ensure that the stored media will not roll, fall, or topple over.
Danger exists of becoming pinned under the media and suffering serious injury.

Handling roll media is an operation that must be performed by two persons or more, and care must be taken to prevent falls.
Attempting to lift heavy media in a manner that taxes your strength may cause physical injury.

⚠ Warning Labels

Warning labels are affixed to make areas of danger immediately clear. The meanings of these labels are as follows. Be sure to heed their warnings.
Also, never remove the labels or allow them to become obscured.

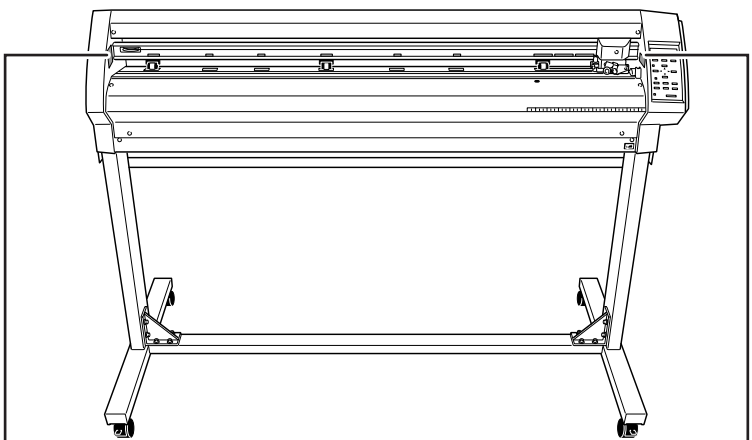

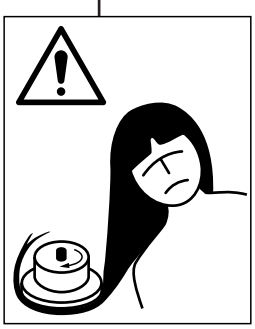

Caution: Entanglement Hazard
Never inadvertently allow hands, hair, clothing such as neckties, or the like near rotating parts while in operation.

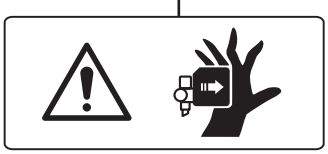

Caution: Moving Carriage
The cutting carriage moves at high speed and pose a hazard. Keep your hands away from it.

⚠ Pour utiliser en toute sécurité

La manipulation ou l'utilisation inadéquates de cet appareil peuvent causer des blessures ou des dommages matériels. Les précautions à prendre pour prévenir les blessures ou les dommages sont décrites ci-dessous.

Avis sur les avertissements

⚠ **ATTENTION**	Utilisé pour avertir l'utilisateur d'un risque de décès ou de blessure grave en cas de mauvaise utilisation de l'appareil.
⚠ **PRUDENCE**	Utilisé pour avertir l'utilisateur d'un risque de blessure ou de dommage matériel en cas de mauvaise utilisation de l'appareil. *Par dommage matériel, il est entendu dommage ou tout autre effet indésirable sur la maison, tous les meubles et même les animaux domestiques.

À propos des symboles

	Le symbole △ attire l'attention de l'utilisateur sur les instructions importantes ou les avertissements. Le sens précis du symbole est déterminé par le dessin à l'intérieur du triangle. Le symbole à gauche signifie "danger d'électrocution."
	Le symbole ⃠ avertit l'utilisateur de ce qu'il ne doit pas faire, ce qui est interdit. La chose spécifique à ne pas faire est indiquée par le dessin à l'intérieur du cercle. Le symbole à gauche signifie que l'appareil ne doit jamais être démonté.
	Le symbole ● prévient l'utilisateur sur ce qu'il doit faire. La chose spécifique à faire est indiquée par le dessin à l'intérieur du cercle. Le symbole à gauche signifie que le fil électrique doit être débranché de la prise.

⚠ L'utilisation incorrecte peut causer des blessures

⚠ ATTENTION

S'assurer de suivre les procédures d'utilisation décrites dans la documentation. Ne jamais permettre à quiconque ne connaît pas le fonctionnement ou la manutention de l'appareil de le toucher.
L'utilisation ou la manutention incorrectes peuvent causer un accident.

Garder les enfants loin de l'appareil.
L'appareil comporte des zones et des composants qui présentent un danger pour les enfants et qui pourraient causer des blessures, la cécité, la suffocation ou d'autres accidents graves.

Ne jamais faire fonctionner l'appareil après avoir consommé de l'alcool ou des médicaments, ou dans un état de fatigue.
L'utilisation de l'appareil exige un jugement sans faille. L'utilisation avec les facultés affaiblies pourrait entraîner un accident.

Ne jamais utiliser l'appareil à des fins autres que celles pour lesquelles il est conçu. Ne jamais l'utiliser de manière abusive ou d'une manière qui dépasse sa capacité.
Le non-respect de cette consigne peut causer des blessures ou un incendie.

Utiliser uniquement des accessoires d'origine (accessoires en option, articles consommables, câble d'alimentation et autres articles semblables), compatibles avec l'appareil.
Les articles incompatibles risquent de causer des accidents.

⚠ ATTENTION

Débrancher le câble d'alimentation avant de procéder au nettoyage ou à l'entretien de l'appareil, et avant d'y fixer ou d'en retirer des accessoires en option.
Tenter ces opérations pendant que l'appareil est branché à une source d'alimentation peut causer des blessures ou un choc électrique.

Ne jamais tenter de démonter, de réparer ou de modifier l'appareil.
Le non-respect de cette consigne risque de provoquer un incendie, un choc électrique ou des blessures. Confier les réparations à un technicien ayant la formation requise.

⚠ PRUDENCE

Faire preuve de prudence pour éviter l'écrasement ou le coincement.
La main ou les doigts peuvent être écrasés ou coincés s'ils entrent en contact avec certaines surfaces par inadvertance. Faire preuve de prudence pendant l'utilisation de l'appareil.

Ne jamais faire fonctionner l'appareil si on porte une cravate, un collier ou des vêtements amples. Bien attacher les cheveux longs.
Ces vêtements ou ces objets peuvent être coincés dans l'appareil, ce qui causerait des blessures.

Utiliser l'appareil dans un endroit propre et bien éclairé.
Travailler dans un endroit sombre ou encombré peut causer un accident; l'utilisateur risque, par exemple, de trébucher malencontreusement et d'être coincé par une partie de l'appareil.

⚠ Risque de décharge ou de choc électrique, d'électrocution ou d'incendie

⚠ ATTENTION

Brancher à une prise électrique conforme aux caractéristiques de cet appareil (tension, fréquence et courant).
Une tension incorrecte ou un courant insuffisant peuvent causer un incendie ou un choc électrique.

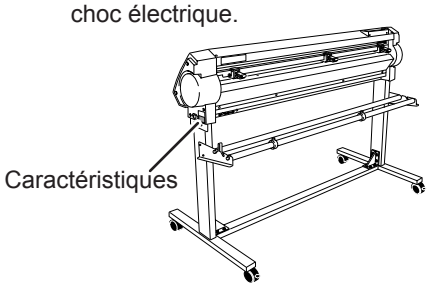

Ne jamais utiliser à l'extérieur ni à un endroit où l'appareil risque d'être exposé à de l'eau ou à une humidité élevée. Ne jamais toucher l'appareil avec des mains mouillées.
Le non-respect de cette consigne risque de provoquer un incendie ou un choc électrique.

Ne jamais insérer d'objet étranger dans l'appareil. Ne jamais exposer l'appareil aux déversements de liquides.
L'insertion d'objets comme des pièces de monnaie ou des allumettes, ou le déversement de liquides dans les orifices de ventilation peuvent causer un incendie ou un choc électrique. Si un objet ou du liquide s'infiltre dans l'appareil, débrancher immédiatement le câble d'alimentation et communiquer avec le représentant Roland DG Corp. autorisé.

Ne jamais placer d'objet inflammable à proximité de l'appareil. Ne jamais utiliser de produit inflammable en aérosol à proximité de l'appareil. Ne jamais utiliser l'appareil dans un endroit où des gaz peuvent s'accumuler.
Une combustion ou une explosion pourraient se produire.

⚠ ATTENTION

Manipuler le câble d'alimentation, la fiche et la prise électrique correctement et avec soin.
Ne jamais utiliser un article endommagé, car cela pourrait causer un incendie ou un choc électrique.

Si une rallonge ou une bande d'alimentation électrique sont utilisées, s'assurer qu'elles correspondent aux caractéristiques de l'appareil (tension, fréquence et courant).
L'utilisation de plusieurs charges électriques sur une prise unique ou une longue rallonge peut causer un incendie.

Mise à la terre.
La mise à la terre peut prévenir un incendie ou un choc électrique dus à une fuite de courant en cas de défaillance.

Placer l'appareil de façon à ce que la fiche soit facile d'accès en tout temps.
Ainsi, l'appareil pourra être débranché rapidement en cas d'urgence. Installer l'appareil près d'une prise électrique. En outre, prévoir suffisamment d'espace pour que la prise électrique soit facile d'accès.

S'il se produit des étincelles, de la fumée, une odeur de brûlé, un bruit inhabituel ou un fonctionnement anormal, débrancher immédiatement le câble d'alimentation. Ne jamais utiliser si un composant est endommagé.
Continuer à utiliser l'appareil peut causer un incendie, un choc électrique ou des blessures. Communiquer avec le représentant Roland DG Corp. Autorisé.

⚠ Remarques importantes à propos du câble d'alimentation, de la fiche et de la prise électrique

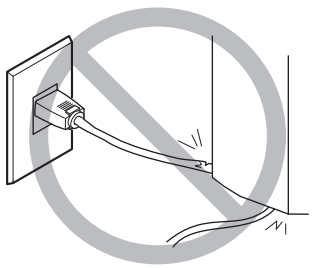

Ne jamais déposer aucun objet sur le câble, sur la fiche ou sur la prise car cela risque de les endommager.

Ne jamais laisser l'eau toucher le câble, la fiche ou la prise.

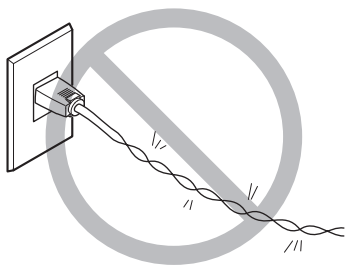

Ne jamais plier ni tordre le câble avec une force excessive.

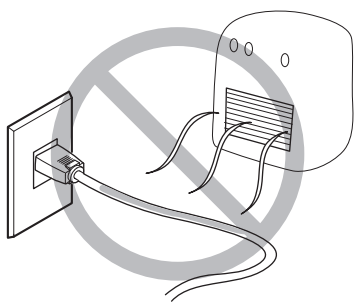

Ne jamais chauffer le câble, la fiche ou la prise.

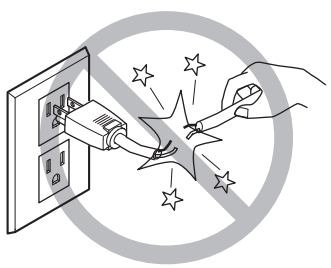

Ne jamais tirer sur le câble ou la fiche avec une force excessive.

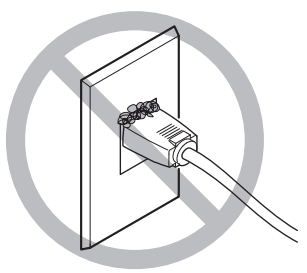

La poussière peut causer un incendie.

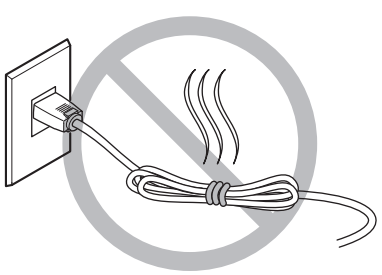

Ne jamais plier ni enrouler le câble.

⚠ Le poids total de l'appareil peut être de 70 kg (154 lb.)

⚠ ATTENTION

Installer l'appareil à un endroit stable et plat et capable de supporter son poids.
Le poids total de l'appareil peut être de 70 kg (154 lb.) ou plus pour le modèle de 64 po (, 60 kg (132 lb.) ou plus pour le modèle de 50 po, 55 kg (121 lb.) ou plus pour le modèle de 40 po, 50 kg (110 lb.) ou plus pour le modèle de 30 po). Installer l'appareil à un endroit inapproprié peut provoquer un accident grave comme le renversement, la chute ou l'écrasement.

Le déchargement et la mise en place doivent être faits par au moins six personnes.
Les tâches qui exigent un effort trop grand si elles sont exécutées par un petit nombre de personnes peuvent être cause de blessures. La chute d'articles très lourds peut aussi causer des blessures.

⚠ ATTENTION

S'assurer de verrouiller les roulettes de la base.
Si l'appareil devait commencer à basculer, il s'ensuivrait un accident grave, par exemple l'écrasement de membres ou du corps.

Prendre les mesures de sécurité adéquates pour l'entreposage des rouleaux de support pour s'assurer qu'ils ne rouleront pas, ne tomberont pas et ne se renverseront pas.
Il y a risque d'être écrasé par le support et de subir des blessures graves.

La manutention du support en rouleau doit être faite par deux personnes ou plus et il faut prendre des précautions pour éviter les chutes.
Tenter de soulever des objets trop lourds peut causer des blessures.

⚠ Vignettes d'avertissement

Des vignettes d'avertissement sont apposées pour qu'il soit facile de repérer les zones dangereuses. La signification des vignettes est donnée ci-dessous. Respecter les avertissements. Ne jamais retirer les vignettes et ne pas les laisser s'encrasser.

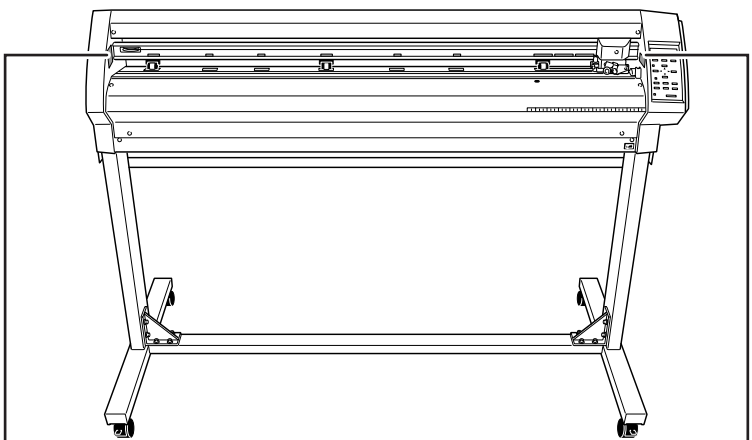

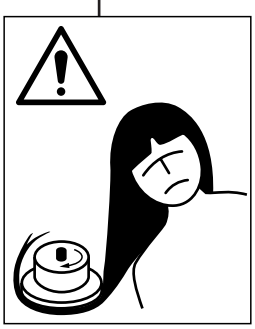

Attention : Danger d'emmêlement
Toujours éloigner les mains, les cheveux, les vêtements ou des accessoires comme des cravates des pièces tournantes pendant que l'appareil fonctionne.

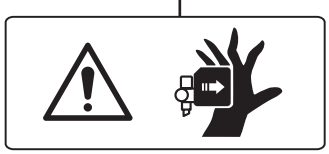

Attention : Chariot mobile
Le chariot de coupe se déplace très rapidement et peut être dangereux. Tenir les mains loin du chariot.

Important Notes on Handling and Use

This machine is a precision device. To ensure the full performance of this machine, be sure to observe the following important points. Failure to observe them may not only result in loss of performance, but may also cause malfunction or breakdown.

Main Unit

This Machine Is a Precision Device

- **Handle carefully, and never subject the machine to impact or excessive force.**

Install in a Suitable Location

- **Install in a location having the specified temperature and relative humidity.**
- **Install in a quiet, stable location offering good operating conditions.**

Important Notes on Connecting the Cables

- **Connect the power cord and the computer's input and output cables securely.**

Chapter 1
Getting Started

Part Names and Functions 18
Front 18
Rear 19
Operation Panel 20
Menu List 21
Menu List 21

Part Names and Functions

Front

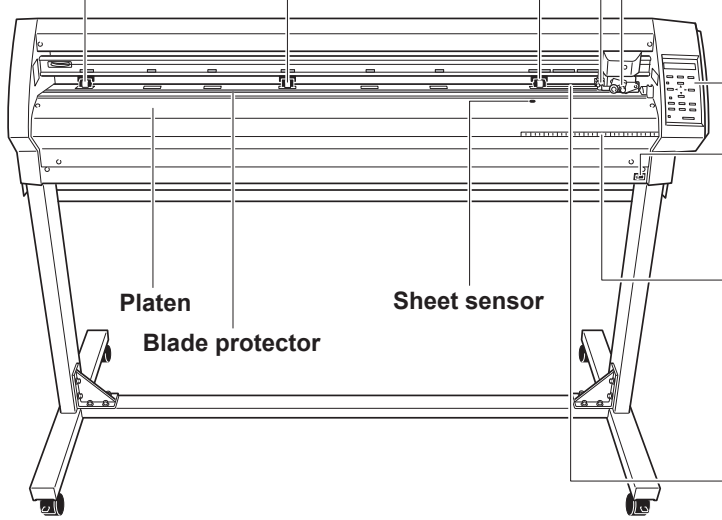

Movable pinch roller (middle)
This is used when cutting materials with a width of 762 mm (30 in.) or more. At this time, it is set at the center of the left and right pinch rollers or above the grit roller near the center.

Movable pinch roller (left)
Set this at the left-hand edge of the material.

Movable pinch roller (right)
Set this at the right-hand edge of the material.

Tool carriage
The tool carriage is where a blade (or the alignment tool) is mounted.

Separating knife
This cuts off a piece of material from roll material.

Operation panel
☞ P. 20, "Operation Panel"

Power switch
ON: when switched to [|].
OFF: when switched to [O].

Guide lines
These are used as guides for making sure the loaded material is straight. Align the right-hand edge of the material with these scale lines.

Grit roller
The pinch rollers and grit rollers grip the material and move it forward and backward.

Rear

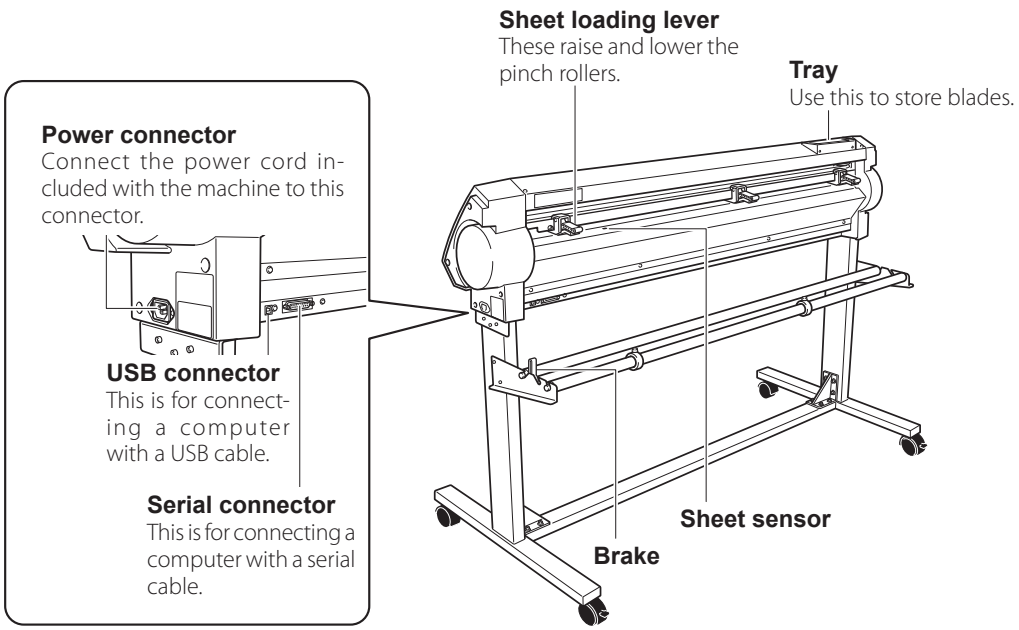
Sheet loading lever
These raise and lower the pinch rollers.
Tray
Use this to store blades.
Power connector
Connect the power cord included with the machine to this connector.
USB connector
This is for connecting a computer with a USB cable.
Serial connector
This is for connecting a computer with a serial cable.
Sheet sensor
Brake

Operation Panel

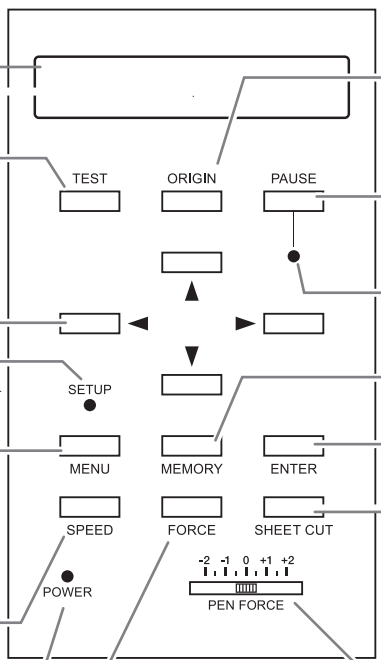

Display screen
This displays various setting menus and other information.

TEST key
This execute cutting test, and confirm whether the values of blade force, blade offset and cutting speed are proper or not.
☞ P. 36, "Cutting Test"

CURSOR keys

SETUP LED
This lights up when material is set up. Cutting can be performed when this is lit.

MENU Key
Pressing this repeatedly switches sequentially among the present cutting condition, the menu mode, and the width-display screen.
☞ P. 87, "List of Functions"

SPEED Key
This key sets the cutting speed.
☞ P. 39, "Adjusting the Cutting Speed"

POWER LED
This lights up when the power is switched on.

FORCE Key
This key sets the blade force.
☞ P. 38, "Adjusting the Blade Force"

ORIGIN Key
This key sets the origin point.
☞ P. 40, "Setting the Origin Point"

PAUSE Key
When pressed once, this temporarily halts cutting in progress. Pressing this key again releases the paused state.

PAUSE LED
This lights up when operation is paused.

MEMORY Key
This key calls the cutting condition memorized.

ENTER Key
This confirms menu items and stores settings in memory.

SHEET CUT Key
This severs the material.

PEN FORCE Slider
This slider performs fine adjustment of the blade force.
☞ P. 38, "Adjusting the Blade Force"

Panel Notation

In this document, the keys on the operation panel are indicated by the following illustration.

- TEST **TEST key**
- ORIGIN **ORIGIN key**
- PAUSE **PAUSE key**
- ▲ ▼ ◄ ► **Cursor key**
- MENU **MENU key**
- MEMORY **MEMORY key**
- ENTER **ENTER key**
- SPEED **SPEED key**
- FORCE **FORCE key**
- SHEET CUT **SHEET CUT key**

Menu List

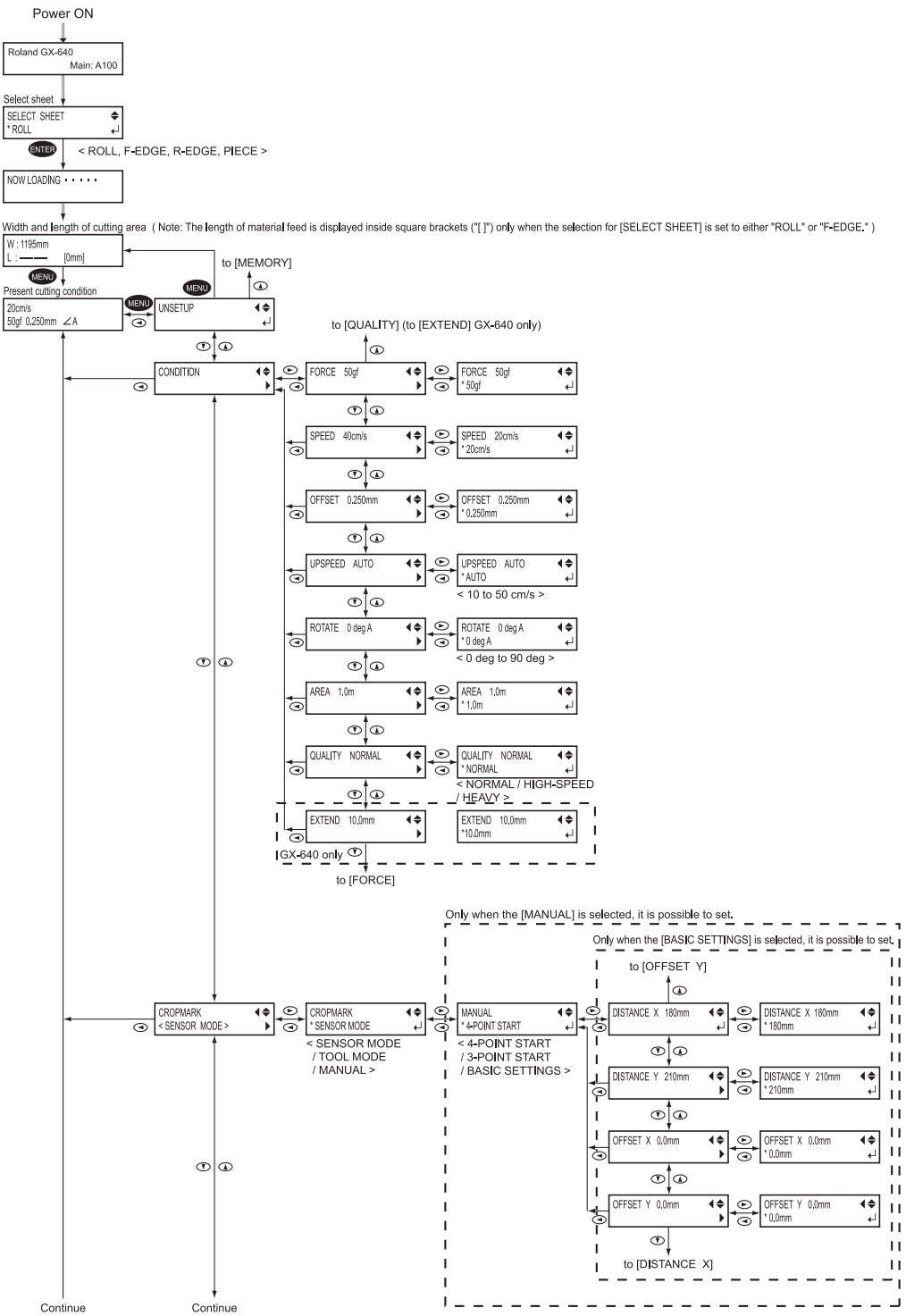
Power ON
Roland GX-640
Main: A100
Select sheet
SELECT SHEET
* ROLL
ENTER
< ROLL, F-EDGE, R-EDGE, PIECE >
NOW LOADING
Width and length of cutting area (Note: The length of material feed is displayed inside square brackets ("[ ]") only when the selection for [SELECT SHEET] is set to either "ROLL" or "F-EDGE.")
W : 1195mm
L : [0mm]
MENU
to [MEMORY]
Present cutting condition
20cm/s
50gf 0.250mm ∠A
UNSETUP
to [QUALITY] (to [EXTEND] GX-640 only)
CONDITION
FORCE 50gf
* 50gf
SPEED 40cm/s
* 20cm/s
OFFSET 0.250mm
* 0.250mm
UPSPEED AUTO
* AUTO
< 10 to 50 cm/s >
ROTATE 0 deg A
* 0 deg A
< 0 deg to 90 deg >
AREA 1.0m
* 1.0m
QUALITY NORMAL
* NORMAL
< NORMAL / HIGH-SPEED / HEAVY >
EXTEND 10.0mm
*10.0mm
GX-640 only
to [FORCE]
Only when the [MANUAL] is selected, it is possible to set.
Only when the [BASIC SETTINGS] is selected, it is possible to set.
to [OFFSET Y]
CROPMARK
< SENSOR MODE >
* SENSOR MODE
< SENSOR MODE / TOOL MODE / MANUAL >
* 4-POINT START
< 4-POINT START / 3-POINT START / BASIC SETTINGS >
DISTANCE X 180mm
* 180mm
DISTANCE Y 210mm
* 210mm
OFFSET X 0.0mm
* 0.0mm
OFFSET Y 0.0mm
* 0.0mm
to [DISTANCE X]
Continue
Continue

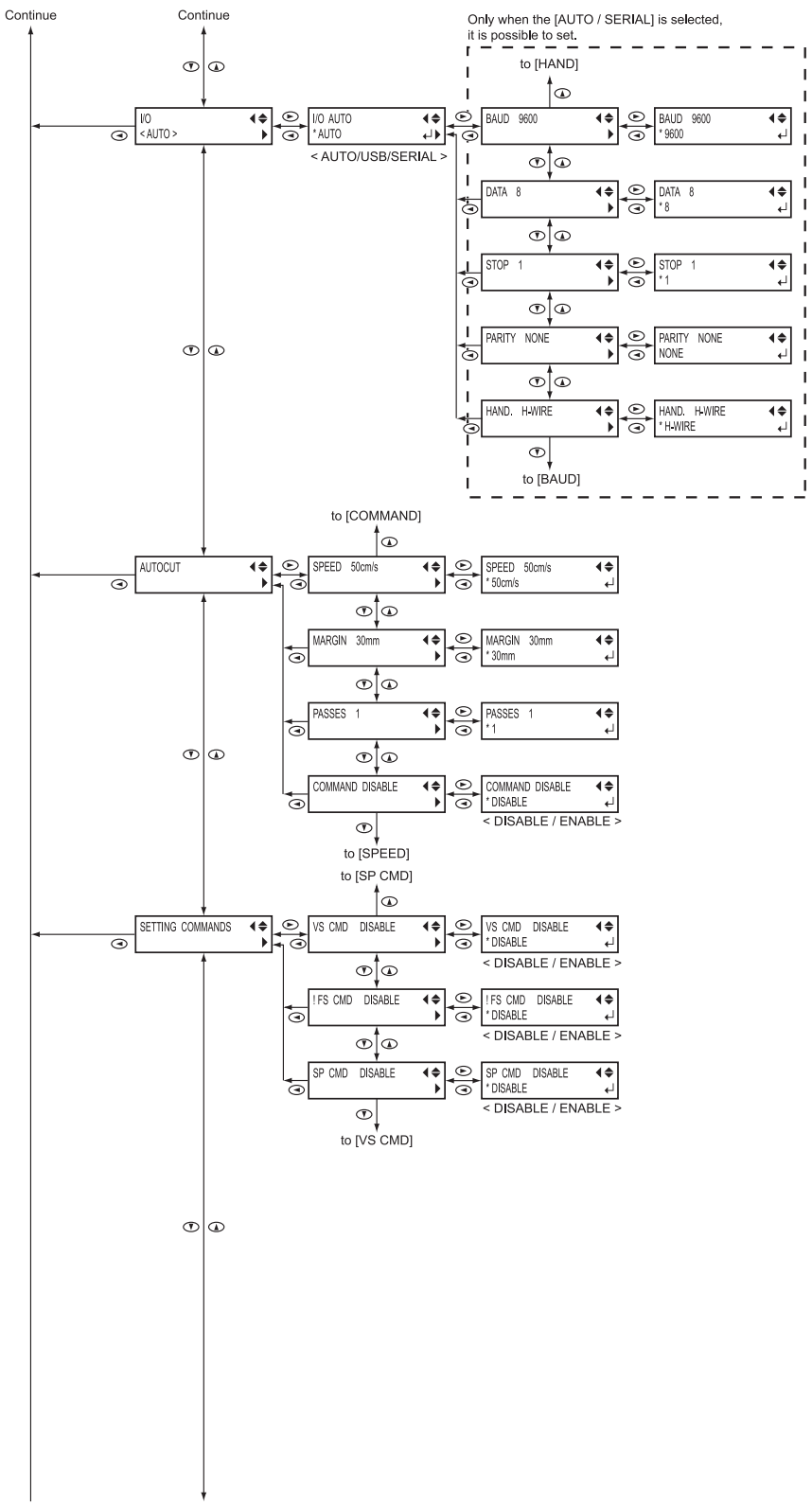
Continue
Continue
Only when the [AUTO / SERIAL] is selected,
it is possible to set.
to [HAND]
I/O
< AUTO >
I/O AUTO
* AUTO
< AUTO/USB/SERIAL >
BAUD 9600
BAUD 9600
* 9600
DATA 8
DATA 8
* 8
STOP 1
STOP 1
* 1
PARITY NONE
PARITY NONE
NONE
HAND. H-WIRE
HAND. H-WIRE
* H-WIRE
to [BAUD]
to [COMMAND]
AUTOCUT
SPEED 50cm/s
SPEED 50cm/s
* 50cm/s
MARGIN 30mm
MARGIN 30mm
* 30mm
PASSES 1
PASSES 1
* 1
COMMAND DISABLE
COMMAND DISABLE
* DISABLE
< DISABLE / ENABLE >
to [SPEED]
to [SP CMD]
SETTING COMMANDS
VS CMD DISABLE
VS CMD DISABLE
* DISABLE
< DISABLE / ENABLE >
! FS CMD DISABLE
! FS CMD DISABLE
* DISABLE
< DISABLE / ENABLE >
SP CMD DISABLE
SP CMD DISABLE
* DISABLE
< DISABLE / ENABLE >
to [VS CMD]
Continue
Continue

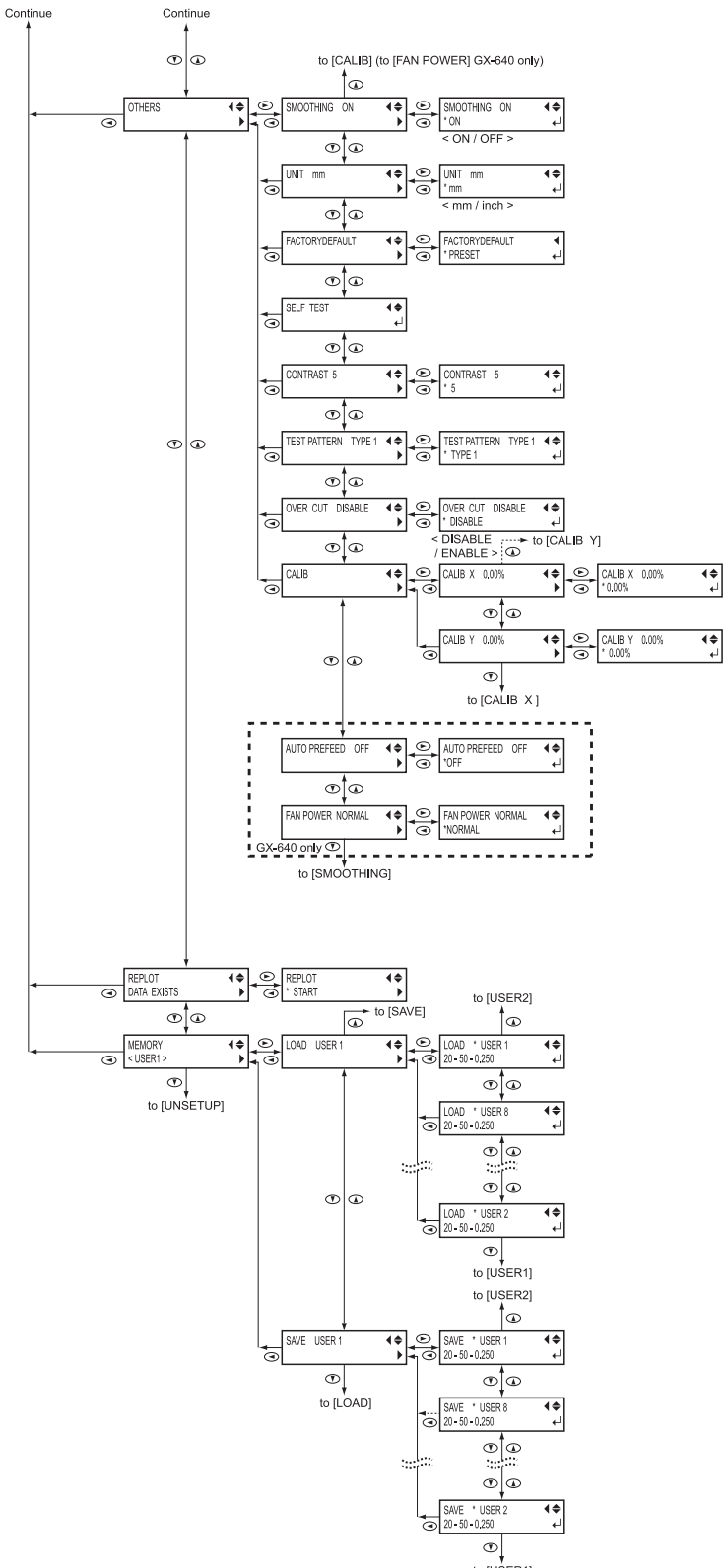
Continue
Continue
to [CALIB] (to [FAN POWER] GX-640 only)
OTHERS
SMOOTHING ON
SMOOTHING ON
* ON
< ON / OFF >
UNIT mm
UNIT mm
* mm
< mm / inch >
FACTORYDEFAULT
FACTORYDEFAULT
* PRESET
SELF TEST
CONTRAST 5
CONTRAST 5
* 5
TEST PATTERN TYPE 1
TEST PATTERN TYPE 1
* TYPE 1
OVER CUT DISABLE
OVER CUT DISABLE
* DISABLE
< DISABLE / ENABLE >
to [CALIB Y]
CALIB
CALIB X 0.00%
CALIB X 0.00%
* 0.00%
CALIB Y 0.00%
CALIB Y 0.00%
* 0.00%
to [CALIB X]
AUTO PREFEED OFF
AUTO PREFEED OFF
*OFF
FAN POWER NORMAL
FAN POWER NORMAL
*NORMAL
GX-640 only
to [SMOOTHING]
REPLOT DATA EXISTS
REPLOT * START
to [SAVE]
to [USER2]
MEMORY < USER1 >
LOAD USER 1
LOAD * USER 1 20 - 50 - 0.250
LOAD * USER 8 20 - 50 - 0.250
LOAD * USER 2 20 - 50 - 0.250
to [UNSETUP]
to [USER1]
to [USER2]
SAVE USER 1
SAVE * USER 1 20 - 50 - 0.250
SAVE * USER 8 20 - 50 - 0.250
SAVE * USER 2 20 - 50 - 0.250
to [LOAD]
to [USER1]

Chapter 2
Basic Operation

Loading the Material (Roll Material).....26
Acceptable Material Width and Maximum Cutting Width.....26
Loading Roll Material.....26
Installing a Blade / Adjustment of a Blade.....35
Installing a Blade.....35
Cutting Test.....36
Adjusting the Blade Force.....38
Adjusting the Cutting Speed.....39
Starting / Quitting Cutting.....40
Setting the Origin Point.....40
Material Test Feed.....40
Downloading Cutting Data.....41
To Sever the Material.....41
Pausing and Resuming Cutting.....41
To Change the Cutting Speed or Blade Force During Cutting...42
When Cutting is Completed.....42

Loading the Material (Roll Material)

Acceptable Material Width and Maximum Cutting Width

⚠CAUTION **Roll material must be placed at a predetermined shaft position.**
Failure to do so may result in falling of the roll, leading to injury.

	Acceptable material widths		Maximum cutting width
	Minimum	Maximum	
GX-640	130 mm	1842 mm	1575 mm (Extendable to 1626mm)
GX-500	90 mm	1372 mm	1195 mm
GX-400	90 mm	1178 mm	1000 mm
GX-300	50 mm	915 mm	737 mm

- For GX-300, the material with a width from 50mm to 540mm and with a width from 582mm to 915mm can be loaded.
- There is no special restriction on length (vertical dimension), as long as it is 200 mm (7-7/8 in.) or more.
- You can also use flat material such as standard-size and piece material. For more information, refer to the page 70 "Using the Cut Material"
- The positions of the grit rollers (pinch rollers that secure the material) vary from one model to another. The settable ranges for the left and right movable pinch rollers are predetermined, and cannot be changed. Refer to the page 29, 30, 31, and 32 "Material Loading Position."
- Setting a pinch roller outside the allowed range causes an error message to appear.

Loading Roll Material

* When performing lengthy cutting of 1.5 m (60 in.) or more, please refer to the page 53 "To Perform Lengthy Cutting."
* For information on how to install the sheet hangers, shafts, brake, and stoppers, please refer to the "ASSEMBLY INSTRUCTIONS" for the PNS-642/502/402/302 (the stand for the GX-640/500/400/300).

Procedure

1 **Mount the shaft on the sheet hangers.**
Place the shaft in accordance with the material diameter as referring to the below figure. If mounted at an incorrect position, the roll may fall off.

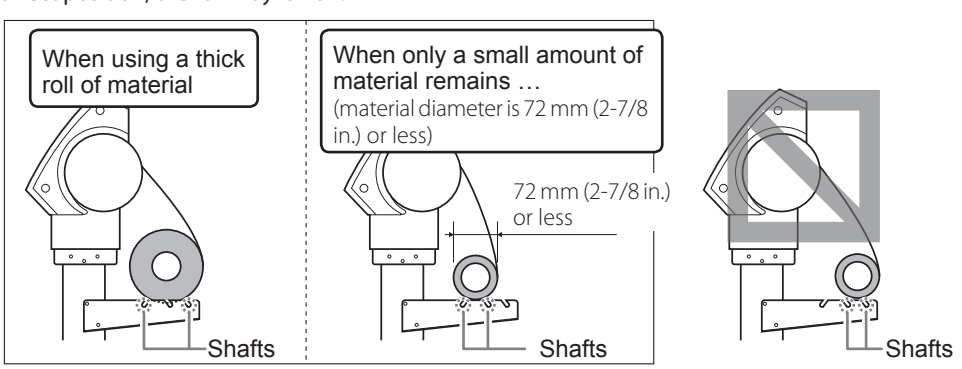

❷

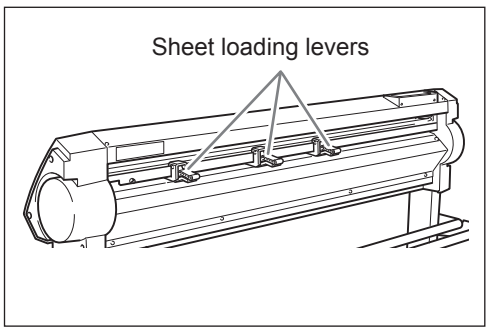

Lower the sheet loading levers to raise the pinch rollers.

❸ **① Place the roll material on the shafts.**
② Release the brake.
③ Pass the end of the material between the pinch rollers and the grit rollers so that it extends from the front of the unit.

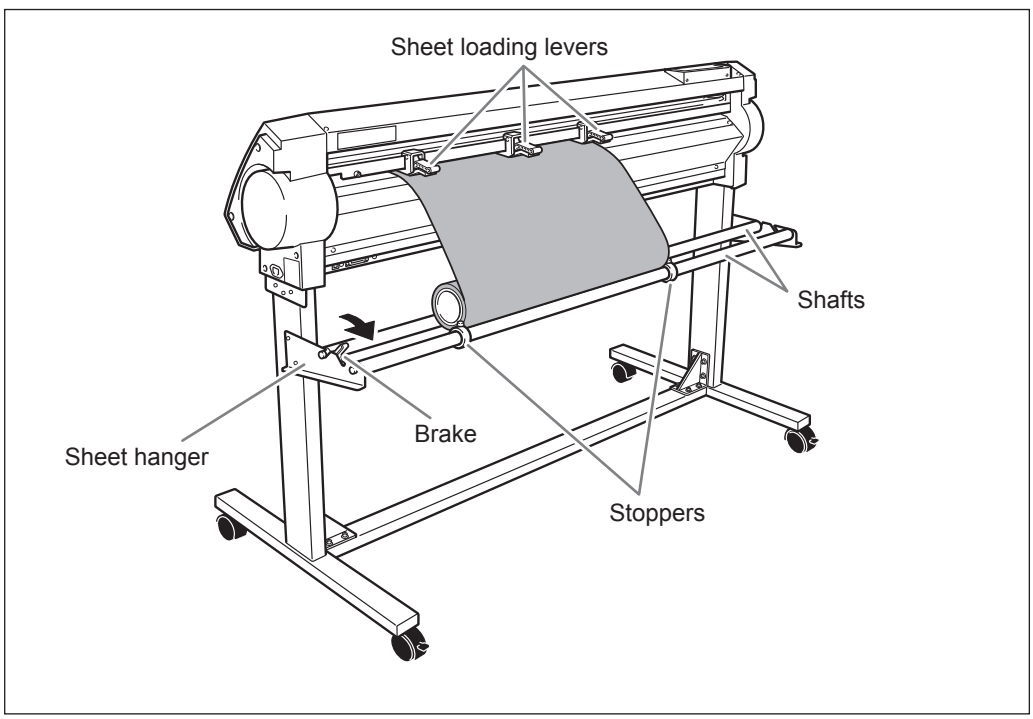

4 Using the grit marks as a reference, position the material so that its right edge lies over the right grit roller and its left edge simultaneously lies over any of the other grit rollers.

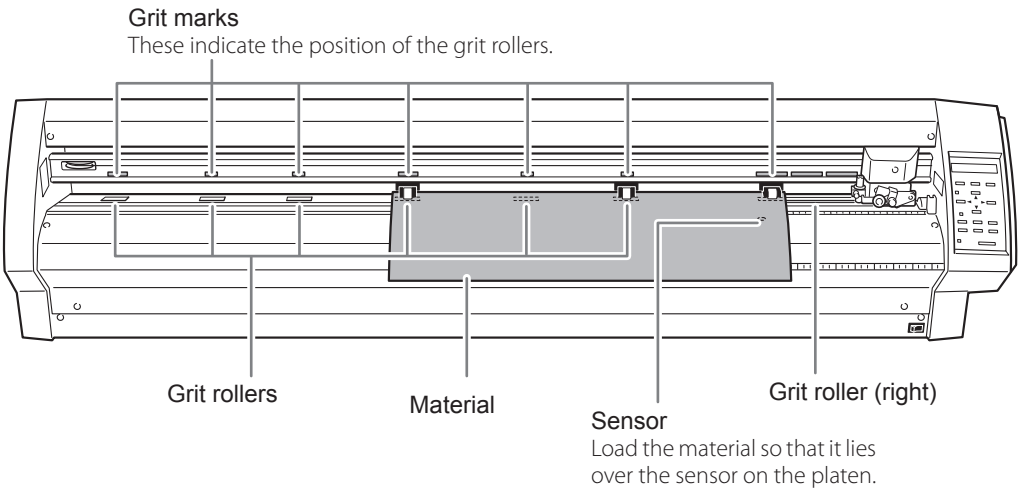

POINT!

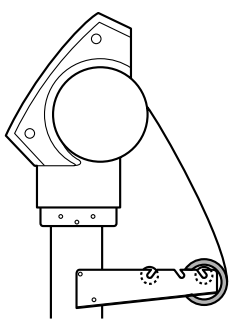

Performing high-speed cutting when only a little roll material remains may cause the roll to fall off the shafts. If this happens, it may help to pass the shaft through the roll.

GX-640
Material Loading Position

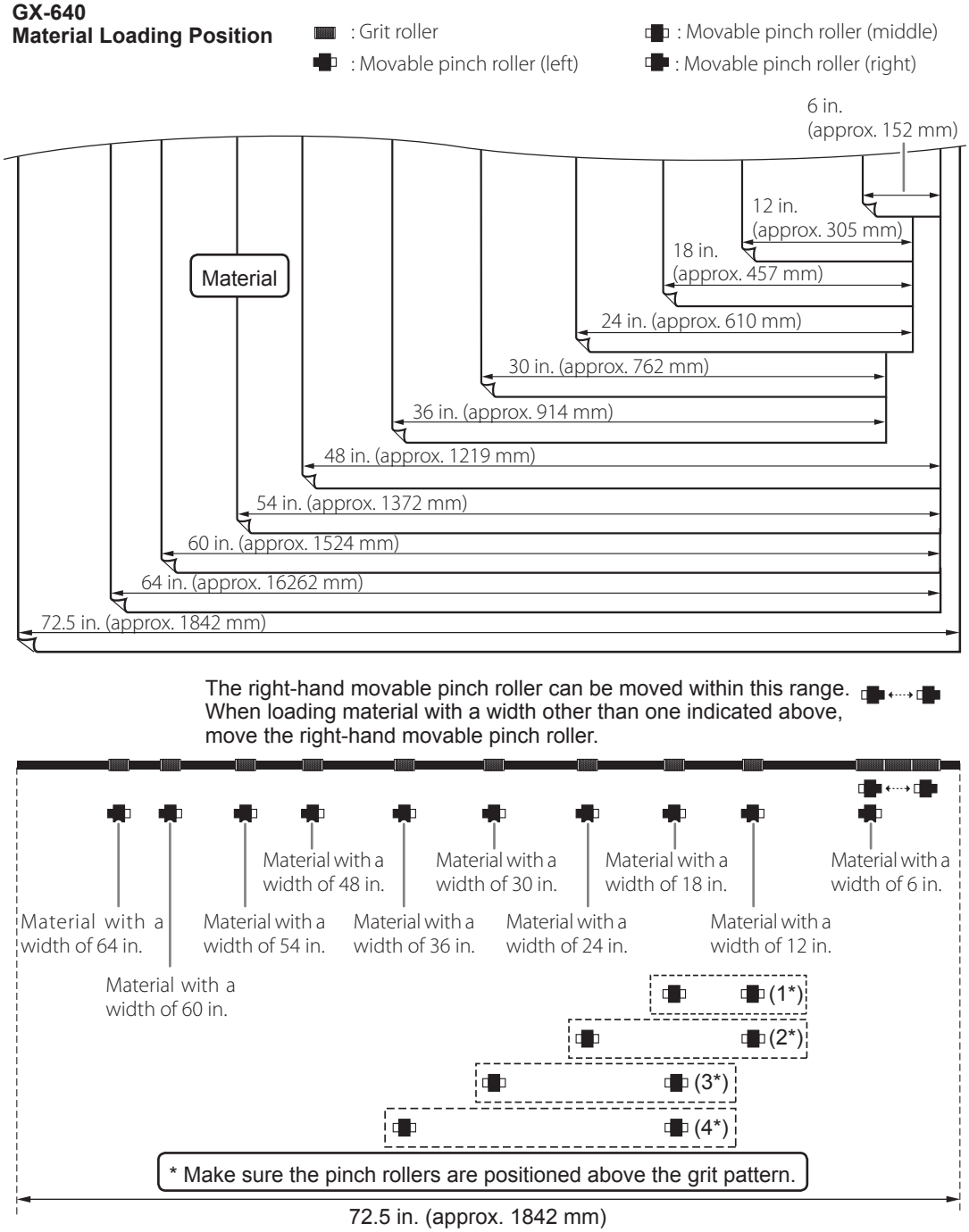

(1*) Position of the pinch roller (middle) when using material with a width of 30 in.
(2*) Position of the pinch roller (middle) when using material with a width of 36 in. or 48 in.
(3*) Position of the pinch roller (middle) when using material with a width of 54 in
(4*) Position of the pinch roller (middle) when using material with a width of 60 in. or 64 in.

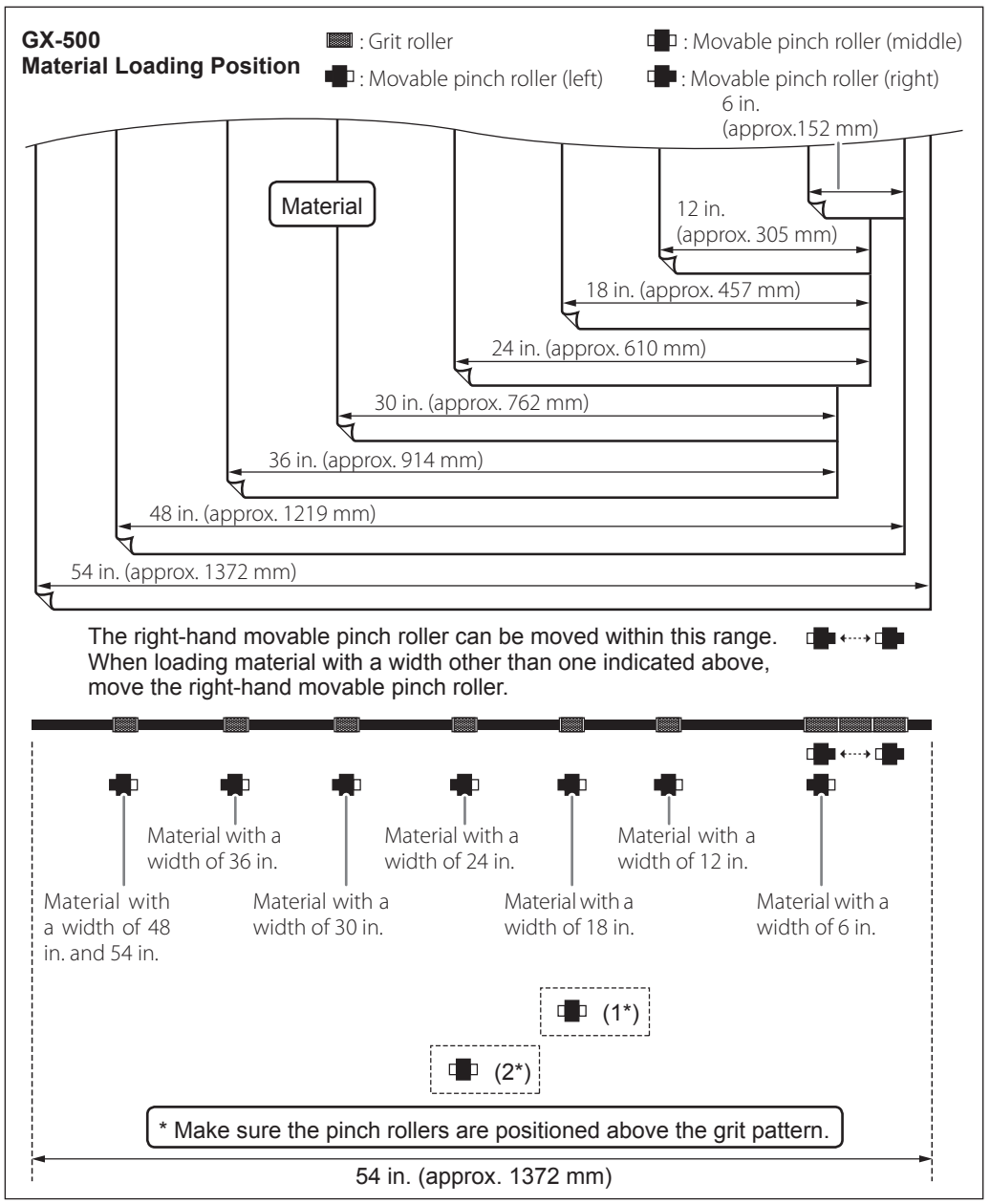

(1*) Position of the pinch roller (middle) when using material with a width of 30 in. or 36 in.
(2*) Position of the pinch roller (middle) when using material with a width of 48 in. or 54 in.

GX-400
Material Loading Position

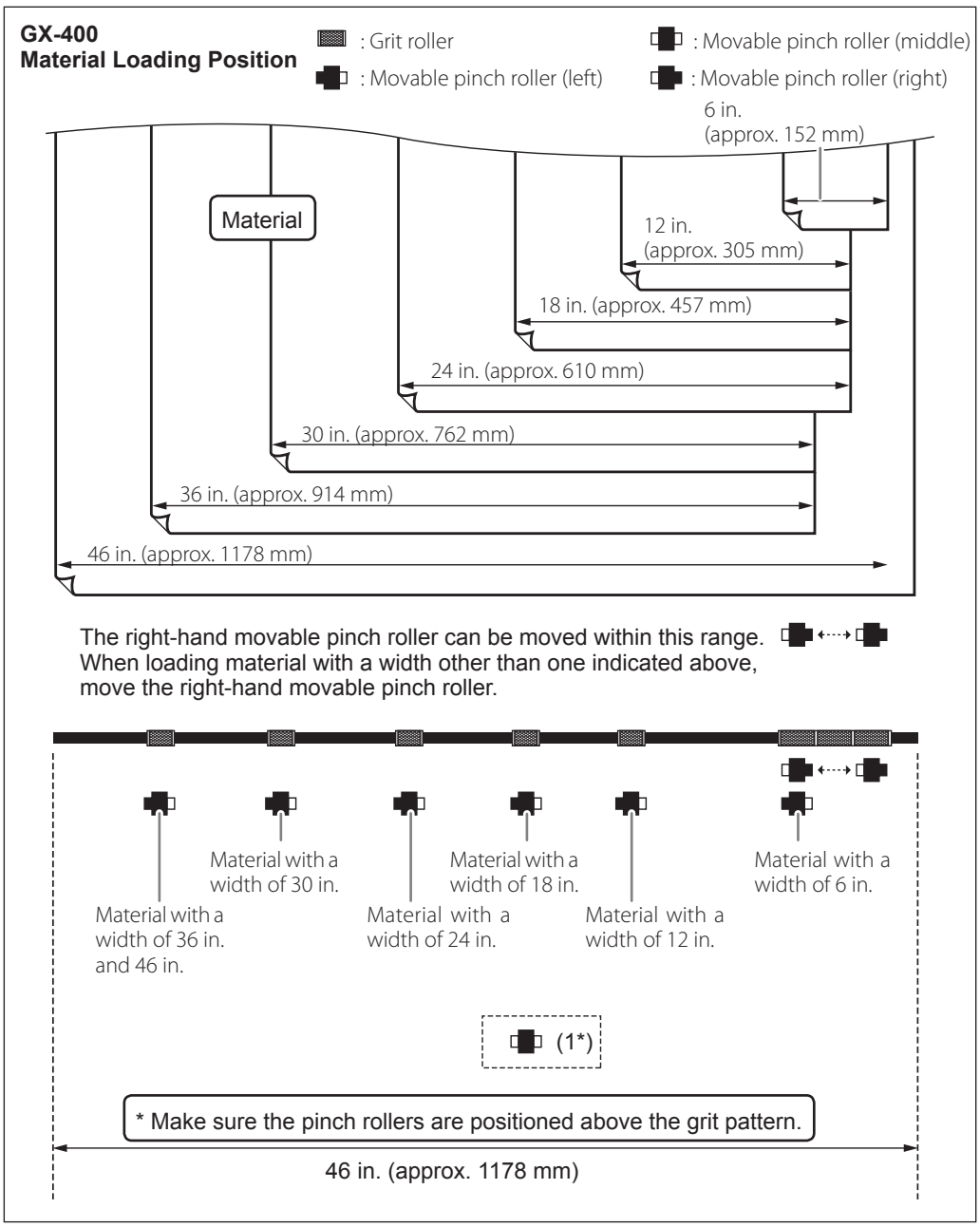

(1*) Position of the pinch roller (middle) when using material with a width of 30 in. or more.

GX-300
Material Loading Position

: Grit roller
: Movable pinch roller (left)
: Movable pinch roller (right)

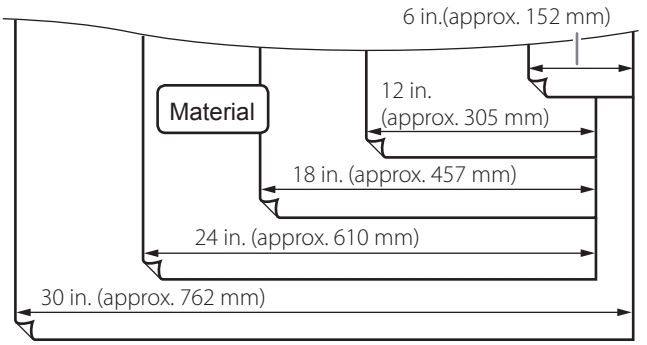

The right-hand movable pinch roller can be moved within this range.
When loading material with a width other than one indicated above, move the right-hand movable pinch roller.

* Acceptable material widths 50 to 540 mm (2 in. to 21 in.), 582 to 915 mm (23 in. to 36 in.)

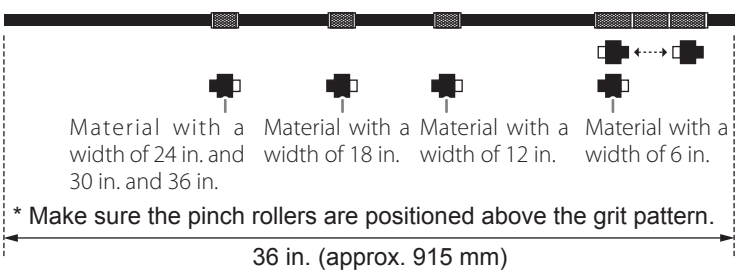

* The GX-300 has no middle pinch roller.

POINT!

To cut off a piece of material with the separating knife, load the media within the range shown below. Loading media outside this range may make it impossible to cut off the material with the separating knife.

From the edge of the leftmost grit pattern
67 mm (2.64 in.) for GX-640
13 mm (0.51 in.) for GX-500/400/300

From the edge of the rightmost grit pattern
85 mm (3.35 in.) for GX-640
37 mm (1.46 in.) for GX-500/400/300

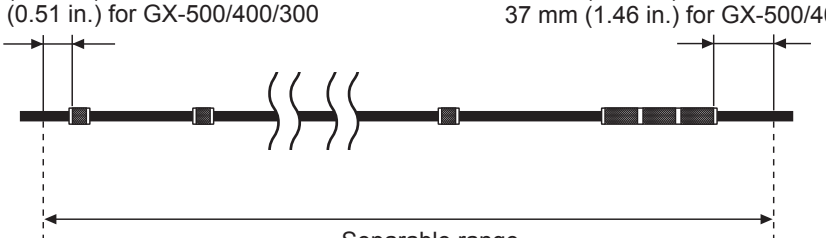

5 **Move the left, right, and middle pinch rollers onto the grit rollers.**

* The GX-300 has no middle pinch roller.

Pull the material in front, and install it straight aligning with the guide line. If the material is crooked, straight material feed cannot be performed. Position the middle pinch roller at the center between the left and right pinch rollers. If a grit mark is present between the left and right pinch rollers, position the middle pinch roller above the corresponding grit roller. If the pinch rollers do not move smoothly, try moving them by grasping near the base of the sheet loading lever at the back of the unit.

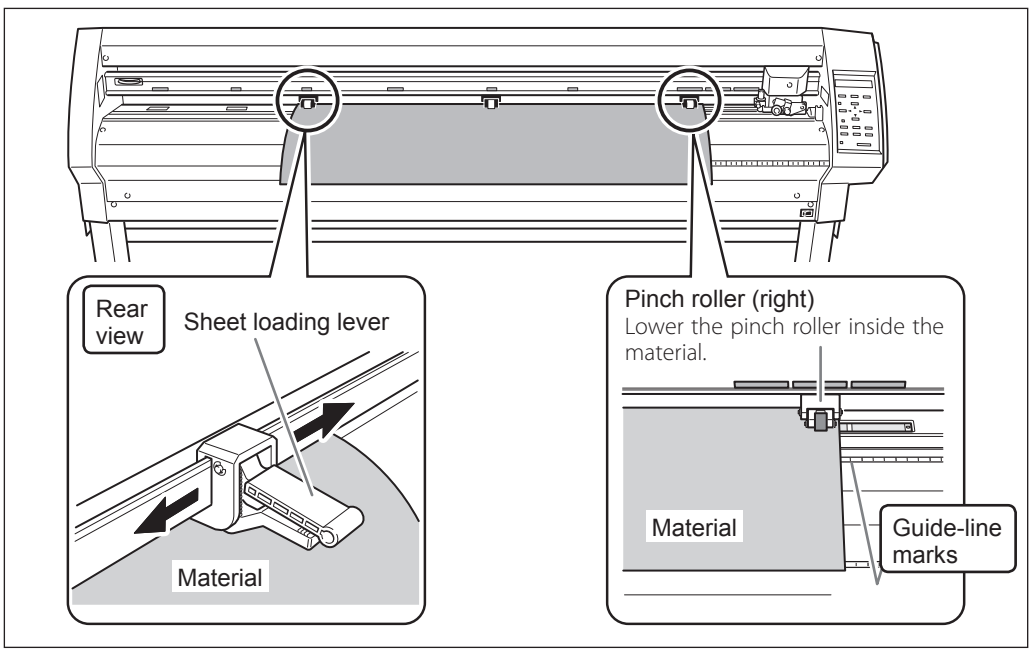

6

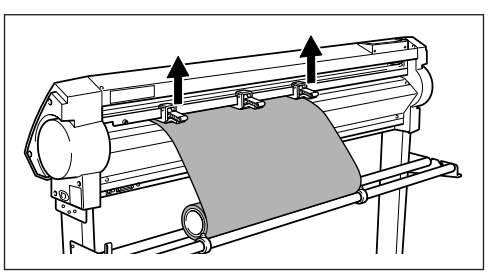

Raise the sheet loading levers.

The pinch rollers are lowered and the material is secured in place. When using a material which is narrower than 762 mm (30 in.), do not lower the middle pinch roller.

7

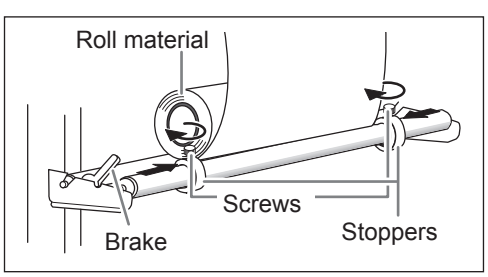

Position the stoppers so that they lightly touch the edges of the roll and secure in place by tightening the screws.

These screws secure the roll of the material so that it will not sway in feeding out.

❽ 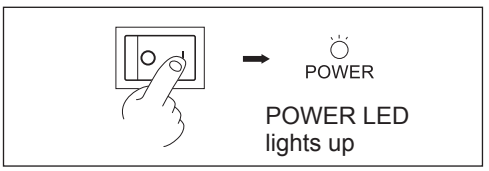

Switch on the power.

❾

When the left figure is displayed. Press ▲ ▼ to select [ROLL].
Press ENTER .

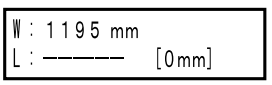

The SETUP LED lights up (setup state), and the horizontal width of the material is detected and shown on the display. Setup is now complete. For more information about selecting material, refer to the page 49 "Details of the Origin-point Location and Cutting Area."

POINT! Be sure to use the left and right pinch rollers

When securing material, be sure to use the left and right pinch rollers, and position them properly above the grit rollers. If the pinch rollers are improperly positioned, the width of material may not be detected accurately, or the error shown at right may occur. If this happens, either unload the material (refer to the page 42 "When Cutting is Completed"), or press ENTER to clear the error, then reposition the pinch rollers correctly to load the material precisely.
When using roll material, before you perform cutting you need to pull out the required length of material from the roll. For more information, refer to the page 40"Material Test Feed."

POINT! Be sure to use the middle pinch roller for the wide material.
In using such wide sheet material as it has a grit mark in between the right and left pinch rollers when it is secured with them, be sure to use the middle pinch roller. Without using it, the stable feed of the material is difficult to maintain, and it increases the potential of deteriorating the cutting quality.

- For GX-640, use the two middle pinch rollers with which it is equipped. (For GX-500/400, it is equipped with one middle pinch roller.)
- The GX-300 has no middle pinch roller.

Installing a Blade / Adjustment of a Blade

Installing a Blade

⚠CAUTION **Do not touch the tip of the blade with your fingers.**
Doing so may result in injury, and the cutting performance of the blade will be impaired.

NOTICE

Be sure to support the tool mounting screw from below when installing the blade holder. If installed without supporting the screw in this way, the blade tip may strike the blade protector, damaging the blade or blade protector and impairing cutting quality.

Procedure

❶

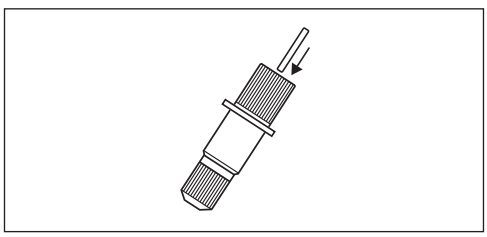

Insert the pin into the blade holder.

❷

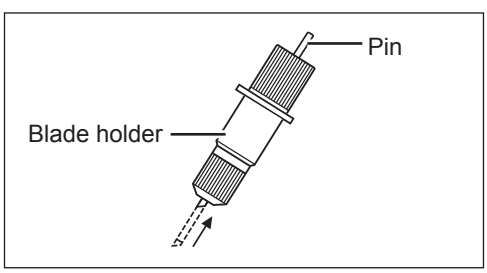

Insert the blade.

❸

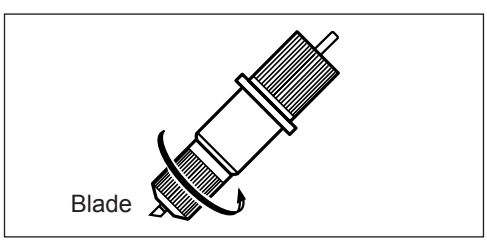

Tighten the cap all the way.

❹

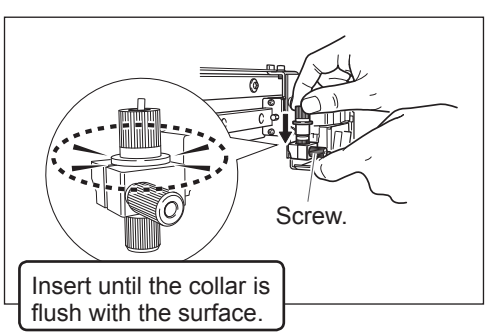

Support the screw from below and insert the blade holder.
If installed without supporting the screw in this way, the blade tip may strike the blade protector, damaging the blade or blade protector and impairing cutting quality.

❺

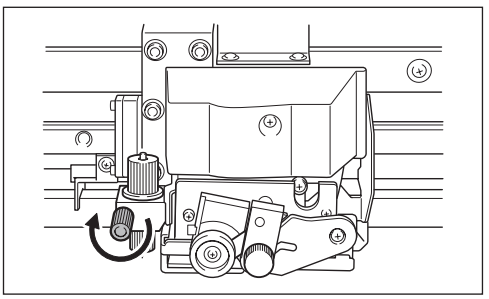

Insert until the collar is flush with the surface.

Tug the blade holder upward to make sure it does not come loose.

POINT!

When you're using general sign material, use with the cap tightened all the way to the top (maximum amount of blade extension: 2.5 mm). When cutting material whose carrier paper is thin with respect to the adhesive layer (that is, the material thickness), or when performing half-cutting for material with no carrier paper, adjust the blade tip so that the tip does not pierce the carrier paper. For more information, refer to the page 46 "Detailed Cutting-condition Settings."

Cutting Test

Before you perform the actual cutting, carry out a cutting test to check the cutting quality for the material. Examine the result of the cutting test, adjust the value of the blade force and cutting speed. Repeat the procedure described below until the appropriate cutting conditions for the material in use are discovered.

☞ P. 38, "Adjusting the Blade Force," p. 39 "Adjusting the Cutting Speed"

Procedure

❶ **Press [▲] [▼] [◄] [►] to move the tool carriage to the place where the cutting test is to be performed.**

An area of approximately 2 square centimeters (a little less than a square inch) is required to make a test cutout (given that the tip of the blade after it has moved is at the origin at lower-left).

❷

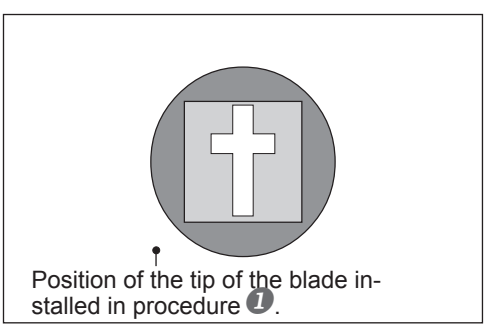

Hold down [TEST] for 0.5 seconds or longer.

Cutting test starts.

POINT!

A cutting test is not possible immediately after you have chosen [R-EDGE] at [SELECT SHEET]. Press [▲] to feed the material several centimeters (1 or 2 inches) toward the rear, then execute the cutting test. You use [R-EDGE] when you are performing front loading. For more information, refer to the page 57 "Front Loading."

❸ Check the state of cutting.

① Peel off the round section (marked by ■).
⇨ When it can be peeled by itself, without disturbing the square (marked by□), the blade force is set appropriately.

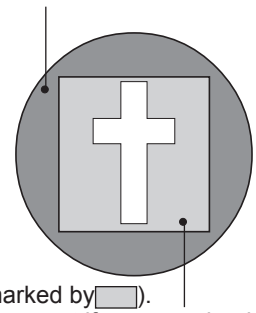

② Remove the square section (marked by□).
⇨ The optimum blade pressure is correct if you can clearly make out the lines left by the blade.

➢ When the offset value has been correctly set, the corners of the figure should appear cleanly cut as shown in A of the figure right.
➢ If the offset value is too small, the corners will appear slightly rounded as illustrated by B.
➢ An offset value which is too large will result in a cut figure similar to C.

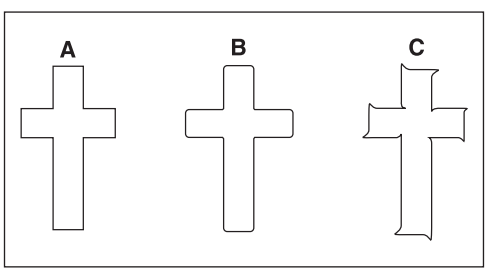

POINT! **For Materials with a Strong Adhesive Layer**

If you are using a material with a strong adhesive layer, the adhesive layer may adhere to itself immediately when cut. This means that even though the material has actually been cut, it may appear as if it has not been cut, and blade force may mistakenly be set too high. If a cutting test shows that the material peels easily and the blade traces on the carrier paper are optimal, then the material is being cut. Take care not to set the blade force excessively high.

Adjusting the Blade Force

Examine the result of the cutting test and adjust the blade force accordingly.

Procedure

1. Set the [PEN FORCE] slider at the center (default) position.

2. 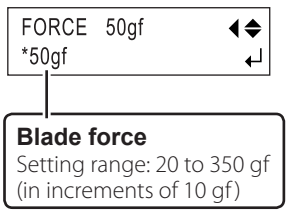

Press [FORCE] to display the screen in the figure.
Press [▲] [▼] to adjust the numerical value.
Press [ENTER] to enable the setting.

POINT!

After using the operation panel to set the blade force, if you want to raise or lower the blade force slightly, you can use the [PEN FORCE] slider to make fine adjustment. Move the slider to the right or left to gradually raise or lower the blade force and set it at an appropriate value. The range of the fine adjustment using the [PEN FORCE] slider is within 30 gf up or down from the value set with the operation panel. When using the operation panel to set the blade force, move the [PEN FORCE] slider to its center (default) position.

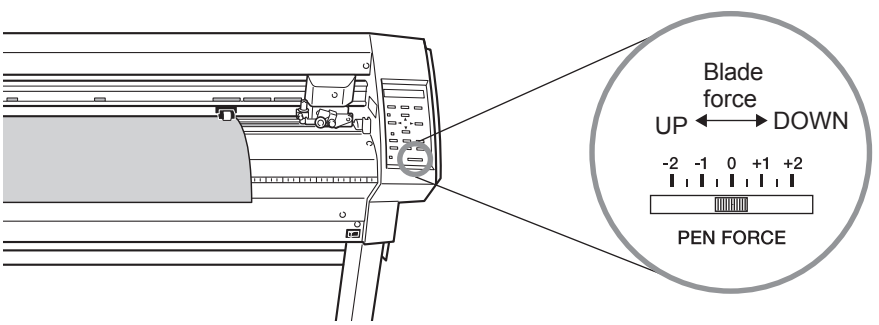

Adjusting the Cutting Speed

Examine the results of the cutting test and adjust the cutting speed accordingly.

Procedure

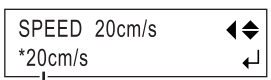

Press SPEED to display the screen in the figure.
Press ▲ ▼ to adjust the numerical value.
Press ENTER to enable the setting.

Cutting-speed adjustment
Setting range: 1 to 85 cm/s
(settable in increments of 1 cm/s)

POINT!

Incorrect cutting conditions may cause symptoms such as those described below.

Blade force

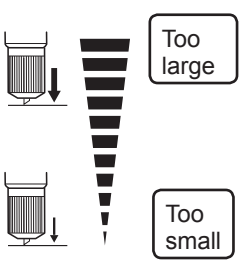

- The material peels during the cutting.
- The blade requires frequency replacement.
- Cutting extends through the base paper, and normal advancing of the material becomes impossible.
- The blade protector is damaged.
- Some parts of the material remain uncut.

Cutting-speed

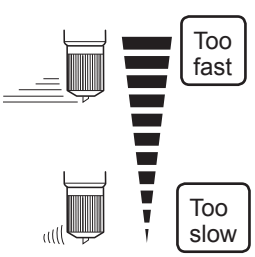

- Uncut areas remain in places.
- The cut depth differs according to the location (nonuniform cutting depth).
- The material peels.
- The cut shape is distorted.
- Cutting takes a long time.

Starting / Quitting Cutting

Setting the Origin Point

With this machine, you can set the location where cutting starts (the origin point) at any position. If the default origin point just after setup (pressing [ENTER]) is acceptable, there is no need for you to explicitly set the origin point. Setting the origin point at the point you want on the material lets you start cutting at any location you like, which can help reduce wasted material.

Procedure

1. **Press [▲] [▼] [◄] [►] to move the blade to the location where you want to set the origin point.**
2. **Hold down [ORIGIN] for 0.5 seconds or longer.**
   The origin point has been set.

Material Test Feed

Perform test feed beforehand to ensure that the roll material is not pulled with undue force during cutting. If the roll material is pulled with undue force during cutting, a motor error may occur, or the position may be displaced. Test feed can also be performed to make sure that the loaded material is straight. Using the [AREA] feature makes it simple to perform test feed for the required portion. Make sure that the type of the material has been selected using the operation panel and that material loading has been completed.

Procedure

1. **Make sure the brake is released.**
2. 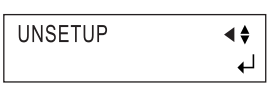

   Press [MENU] several times until the screen shown in the figure appears.
   Press [▼].
3.

   Press [►].
4. 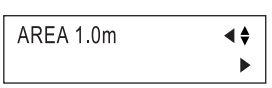

   Press [▲] several times until the screen shown in the figure appears.
   Press [►].
5. 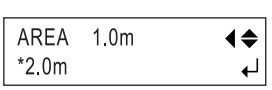

   Press [▲] [▼] to make the setting for the required material length.
   Set the length that is about 0.2 m longer than the required material length. (A positive value signifies material feed toward the front, and a negative value signifies material feed toward the back. If you are performing front loading, set the length to a negative value.
   ☞ P. 57, “Front Loading”
6. **Press [ENTER] to start the test feed.**
7. 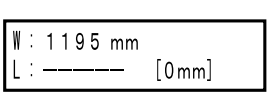

   Press [MENU] go back to the screen shown in the figure.

Downloading Cutting Data

Cutting starts when the machine receives cutting data sent from the computer. The CAMM-1 driver is necessary to perform cutting with this machine using data created by another program. The CAMM-1 driver is found on the included CD-ROM. For information on how to install it, take a look at the included Setup Guide.

NOTICE

If the material becomes dislodged or there is a problem in operation, then immediately press PAUSE or turn off the power switch on the right side of the machine.

To Sever the Material

With this machine, it is possible to cut off the material after performing cutting. Holding down SHEET CUT for 0.5 seconds or longer severs the material.

Pausing and Resuming Cutting

To suspend or resume the process during cutting, perform the following operation.

Procedure

❶

```
CONTINUE ▶ PAUSE
STOP     ▶ ENTER
```

Press PAUSE.
Cutting is paused and the screen shown in the figure appears on the display.

❷ **Press PAUSE again.**
Cutting is resumed.

To Terminate Cutting

First of all, stop the flow of data being sent by the computer. Then hold down ENTER for 0.5 seconds or longer. Cutting stops and the screen shown in the figure appears on the display.

```
W : 1195 mm
L : ------  [0mm]
```

To Change the Cutting Speed or Blade Force During Cutting

If you change the cutting speed or blade force during cutting, carry out the operation described below.

Procedure

❶ **Press** PAUSE **.**

The cutting operation pauses and the screen shown in the figure appears.

❷ **If you want to change the cutting speed, press** SPEED **.**
If you want to change the blade force, press FORCE **.**

❸

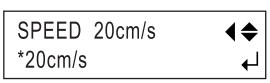

Press ▲ ▼ **to change the value.**
Press ENTER **to enable the setting.**
The display flashes several times, then returns to the screen shown in the figure.

❹

To resume cutting, press PAUSE **.**
To quit cutting, first stop sending the cutting data from the computer, then hold down ENTER **for 0.5 second or longer.**

You can also perform fine adjustment in blade force while cutting is in progress by using the [PEN FORCE] slider.

☞ P. 38, “Adjusting the Blade Force,” p. 39, ”Adjusting the Cutting Speed”

When Cutting is Completed

⚠CAUTION **When not in use for extended periods, unplug the power cord from the electrical outlet.**
Failure to do so may result in danger of shock, electrocution, or fire due to deterioration of the electrical insulation.

NOTICE

- Never leave the tool securing screw tightened. Tightening the screw makes it more difficult to install the blade holder.
- Never leave the machine with the pinch rollers lowered. The rollers may deform, making normal material feed impossible.

Procedure

❶

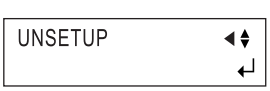

Press MENU **several times until the screen shown in the figure appears.**
Press ENTER **.**
The tool carriage moves to right edge and the loaded material is released. This is the “unsetup” state.

❷

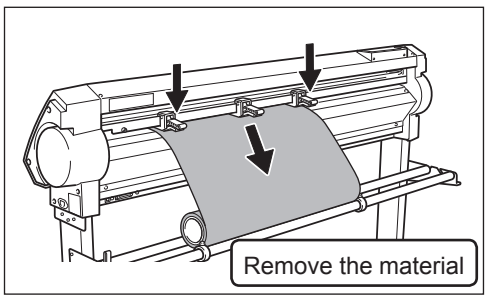

Lower the sheet loading levers and remove the material.

❸

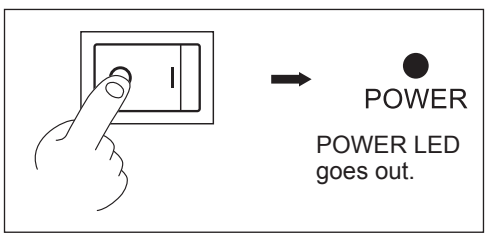

Turn off the power.

❹

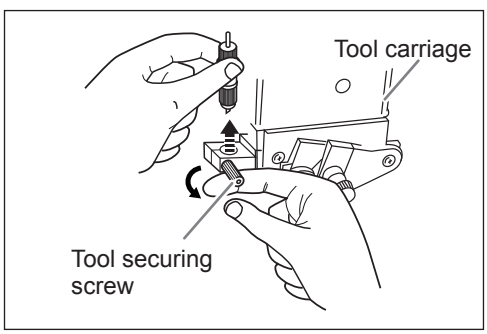

Loosen the tool securing screw, and remove the blade holder from the tool carriage.

❺

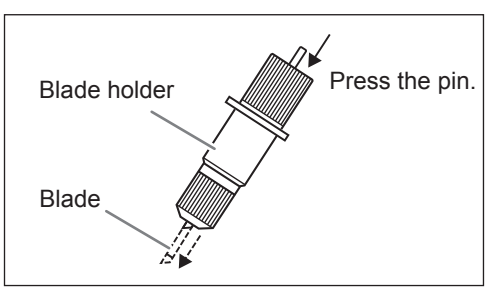

Press the pin and remove the blade from the blade holder.

As debris of material or paste might cling to the tip of a used blade, wipe it with a soft cloth to remove them.

Chapter 3
Part of Practice

Detailed Cutting-condition Settings....46
- Adjusting the Blade Extension....46
- Adjusting the Blade Offset....47
- Changing the Speed When Raised (Up Speed)....47
- Settings for Cutting Quality....48

Details of the Origin-point Location and Cutting Area....49
- The Location of the Origin Point Immediately After Loading Material....49
- Coordinate Rotation Settings....51
- About the Cutting Area....52

To Perform Lengthy Cutting....53
- Lengthy Cutting: Points to Remember....53
- Lengthy Cutting: Loading Material....53

Repeating the Same Cutting....56
- Repeating the Same Cutting....56

Front Loading....57
- What is the Front Loading....57
- Loading Material....57
- Setting the Cutting Area Using the Operation Panel....58
- Setting the Cutting Area Using the CAMM-1 Driver....59

The Overcut Feature....61
- About the Overcut Feature....61
- Setting Overcutting to [ENABLE]....61

The Memory Feature....62
- About the Memory Feature....62
- To Store in Memory....62
- Calling Up....63
- Deleting Settings....63

The Crop Mark Feature....64
- About the Crop Mark Feature....64
- Using the Included Program....64
- Using a Program Other Than the Included Program....65
- If the Printing and Cutting Positions Are Misaligned....68

Performing Test Feed of Material Automatically....69
- Performing Test Feed of Material Automatically....69

Using Various Kind of the Materials....70
- Using the Cut Material....70
- Using the Material Easy to be Winkled/Hard to be Fed....71
- Important Note and Advice in Using Special Material....72

Detailed Cutting-condition Settings

Adjusting the Blade Extension

When you want to perform accurate and fine adjustment of the cutting-in amount, such as when cutting material with thin carrier paper or when performing half-cutting of material having no carrier paper, you can obtain good results by adjusting the tip of the blade.

Adjusting the blade extension amount

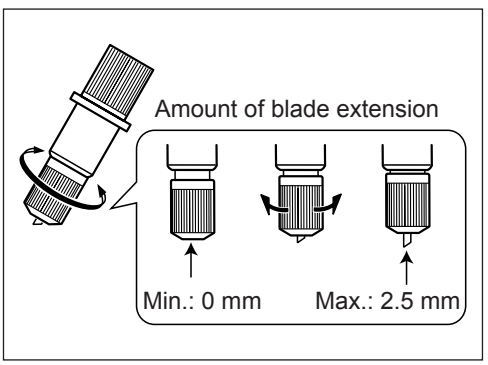

Each indicator tick corresponds to 0.1 mm, and adjustment for 0.5 mm can be made by rotating the cap one full turn.

Adjusting the cutting-in amount

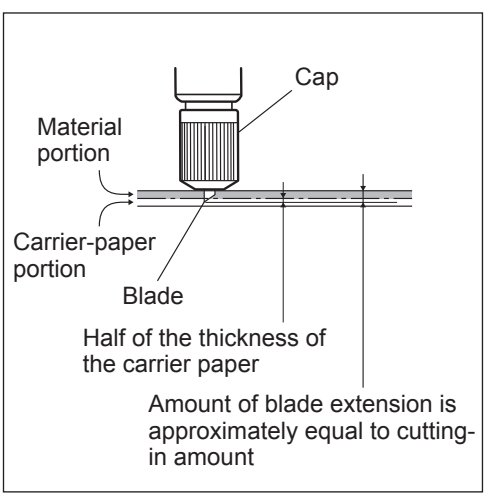

Turn the cap portion to adjust the amount of blade extension, which is approximately equal to the cutting-in amount. Setting the blade force slightly higher than normal achieves a stable cutting-in amount.

Rough Estimate for the Amount of Blade Extension

Use the following dimension as a rough estimate for setting the amount of blade extension.

$$\text{Amount of blade extension} = \text{Thickness of the material portion} + \frac{\text{Thickness of the carrier paper portion}}{2}$$

Adjusting the Blade Offset

The blade offset is determined according to the blade. The included blade is designed to cut correctly at a setting of 0.25 mm, but adjustment may be required when using another type of blade. For information about the optimal offset for each blade, refer to the page 86 "Selecting the Material and Blade." Good results can also be obtained by performing fine adjustment of blade offset according to the material.

Procedure

❶

Press [MENU] several times until the screen shown in the figure appears.
Press [▼].
Press [►].

❷ 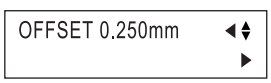

Press [▼] several times until the screen shown in the figure appears.
Press [►].

❸ 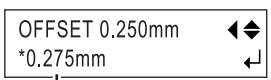

Press [▲] [▼] to set the value.
Press [ENTER] to enable the setting.

Setting range:
0 to 1.000 mm
(in increments of 0.025 mm)

❹ 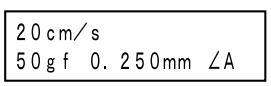

Press [MENU] to go back to the screen shown in the figure.

Changing the Speed When Raised (Up Speed)

With this machine, you can set the speed for movement to the next cutting location with the tool raised while cutting is in progress. In cases such as when the material rises up over the platen and the surface of the material is damaged by the blade when the material moves forward and backward while the tool is raised, you can avoid problems by lowering the speed.

Procedure

❶ 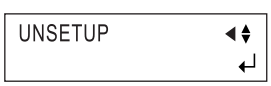

[MENU] several times until the screen shown in the figure appears.
Press [▼].
Press [►].

❷

Press [▼] several times until the screen shown in the figure appears.
Press [►].

❸ UPSPEED AUTO ◀▲▼
*50cm/s ↵

Setting range:
AUTO, 10 to 50 cm/s
(in increments of 10 cm/s)

Press ▲ ▼ to set the value.
Press ENTER to enable the setting.

❹ 20cm/s
50gf 0.250mm ∠A

Press MENU to go back to the screen shown in the figure.

Settings for Cutting Quality

You can select whether speed is given priority in cutting, or whether cutting quality is emphasized. This is also effective in preventing misalignment and motor errors when cutting heavy material.

Procedure

❶ UNSETUP ◀▲▼
↵

Press MENU several times until the screen shown in the figure appears.
Press ▼.
Press ►.

❷ QUALITY NORMAL ◀▲▼
►

Press ▼ several times until the screen shown in the figure appears.
Press ►.

❸ QUALITY NORMAL ◀▲▼
*HEAVY ↵

Adjusting Cutting Quality
Setting range:
NORMAL, HEAVY, HI-SPEED

Press ▲ ▼ to set the value.
Press ENTER to enable the setting.

HEAVY⇦⇨NORMAL⇦⇨Hi-SPEED

Emphasis on Quality ◀—▶ Priority on Speed

- When you want cutting to be as attractive as possible
- When heavy material is loaded

- When you want to cut as rapidly as possible (used together with cutting speed)

❹ 20cm/s
50gf 0.250mm ∠A

Press MENU to go back to the screen shown in the figure.

Details of the Origin-point Location and Cutting Area

The Location of the Origin Point Immediately After Loading Material

With this machine, the initial origin point is determined when you load material and press ENTER. This origin point differs according to the selection made for [SELECT SHEET] on the operation panel when loading material.

Setting when material is loaded	Location of the origin-point
[ROLL]	Set near the left-hand pinch roller
[F-EDGE]	Set at the front left edge of the material
[R-EDGE]	Set at the inner left edge of the material (When using the "Front loading")
[PIECE]	Material size is detected and the origin is set at the lower-left area of the material

For more information, see the following page.

* When [ROTATE] is set to [90deg], the initial origin point is set at the lower right with the X and Y axes rotated 90 degrees.

The Location of the Origin Point Immediately After Loading Material (When [ROTATE] is set to [0deg])

"ROLL" (When using roll material)

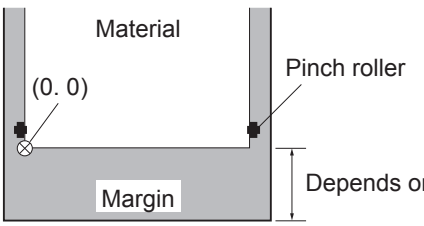

The origin point is set at the location where the material is loaded, near the left pinch roller.

"F-EDGE" (When performing cutting from as close as possible to the front edge of the material)

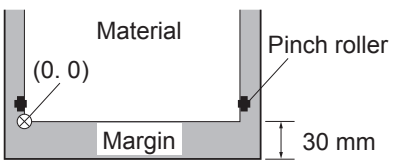

Set the origin point at a location having a margin of 30 mm (1-3/16 in.) from the front edge of the material.

"R-EDGE" (When using the front-loading feature)

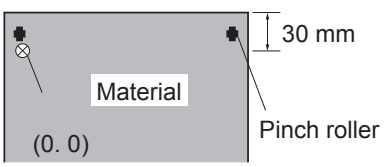

Set the origin point at a location having a margin of 30 mm (1-3/16 in.) from the trailing edge of the material. When in this state, the cutting area is zero.

"PIECE" (When using flat material)

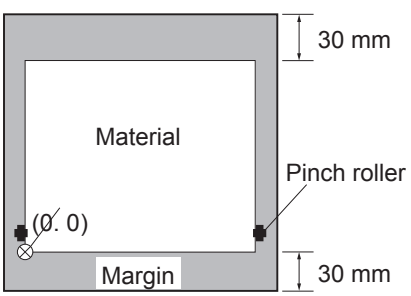

After length in the direction of material feed is detected, movement 30 mm (1-3/16 in.) back from the front edge of the material is performed, and the origin point is set near the left pinch roller.
* When the length of the material is 1,600 mm (63 in.) or longer, the material is determined to be roll material. The origin point is set in the same way as for "ROLL" above.

* For detailed information about the cutting area, see the following page.

Coordinate Rotation Settings

This rotates the cutting coordinates by 90 degrees. The default setting is at [0deg], and the origin point is set at the lower left of the material. Setting this to [90deg] set the origin point at the lower right of the material and rotates the text (or graphics) by 90 degrees. When rotated 90 degrees, the X axis, Y axis, and origin point change as follows.

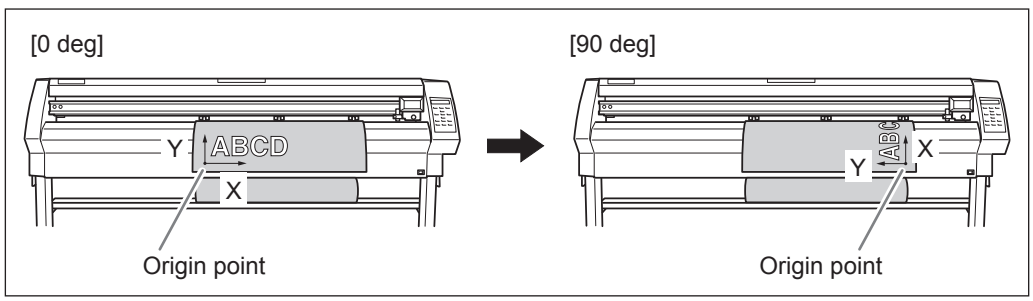

- Note that the coordinate axes change when rotated.
- Make the settings to match the program you're using.
- When this is set to [90deg] on the operation panel, then the CAMM-1 driver's [Rotate] setting must be set to [Rotate off].

Procedure

❶ UNSETUP ◂▴ ↵

Press [MENU] several times until the screen shown in the figure appears.
Press [▼].
Press [►].

❷ ROTATE 0deg A ◂▴ ▸

Press [▼] several times until the screen shown in the figure appears.
Press [►].

❸ ROTATE 0deg A ◂▴
*90deg ∠ ↵

Press [▲] [▼] to select [90deg].
Press [ENTER] to enable the setting.

❹ 20cm/s
50gf 0.250mm ∠

Press [MENU] to go back to the screen shown in the figure.

About the Cutting Area

The cutting area along the horizontal plane (the direction in which the tool carriage moves) is determined by the position of the pinch rollers. The workable area spans the length between the two rollers, minus a margin of about 1 mm (about 0.04 in.) on both sides.
If the material length is greater than 1,600 mm (63 in.) when a flat material has been loaded, this machine determines it to be a roll material and sets the material length to 24,998 mm (984-1/8 in.). Also, when loading flat material (that is, when [PIECE] has been selected), a piece of material that is about 100 mm (3-15/16 in.) longer than the vertical size of the cutting data is required.

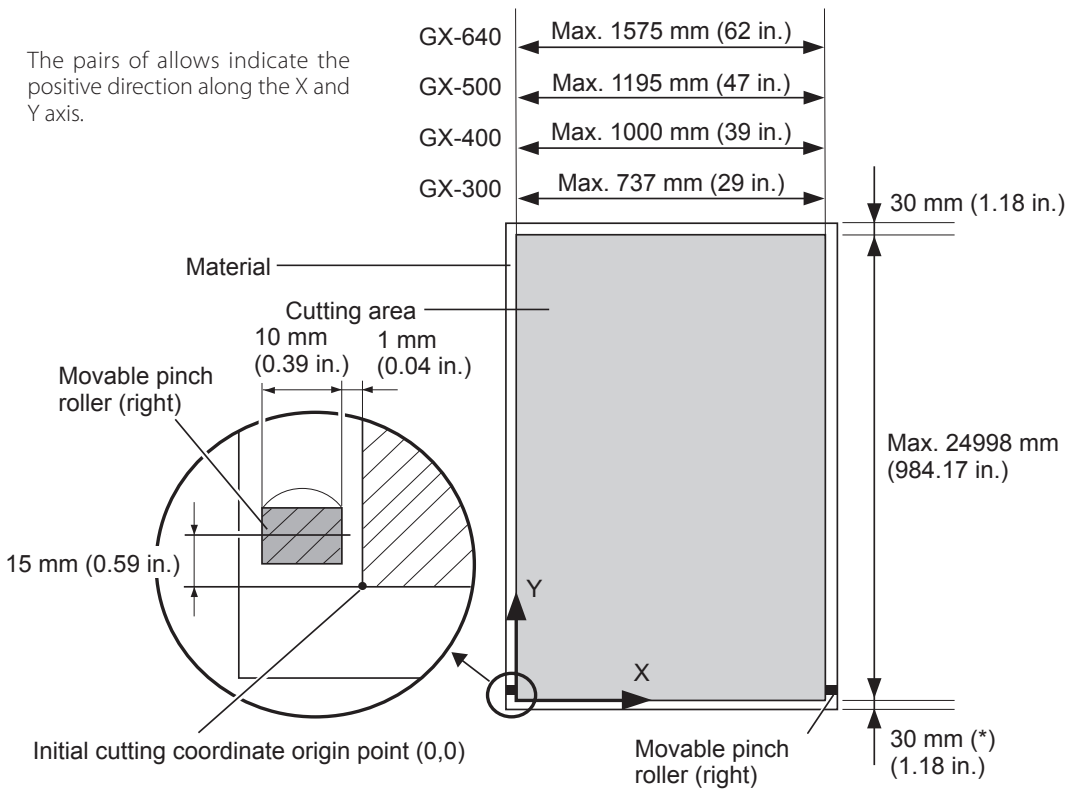

- When you select [F-EDGE] or [PIECE], this is 30 mm (1-3/16 in.)
- When you select [ROLL], everything toward the front from the origin point is the margin.

☞ P. 49, " The Location of the Origin Point Immediately After Loading Material"

* When you have separated the material using SHEET CUT, this is the value set for [MARGIN] at the [AUTOCUT].

☞ P. 87, "List of Functions"

To Perform Lengthy Cutting

Lengthy Cutting: Points to Remember

- **The longer is the cut material, the greater are the chances that the material will become crooked or come loose.**
  It is important to load the material straight, make sure the margins are wide enough, and perform test feed to check the material feed. The high-accuracy sheet hangers and brake on this machine can minimize crookedness of material.
- **Have on hand a piece of material that's at least 50 mm (2 in.) wider than the cutting width.**
- **Load the material while a brake is put on the shaft and tension is applied to the material.**
  By doing so, the material can be installed without crook, and it will prevent the material from coming off.
- **When performing the lengthy cutting, we highly recommend that you turn [OFF] the [AUTO FEED] as the feature is unsuitable to the lengthy cutting.**
  (The [AUTO FEED] feature is available only for GX-640.)
  ☞ P. 91, "Description of Menu Items" ([OTHERS] – [AUTO PREFEED])

Lengthy Cutting: Loading Material

NOTICE

When performing material feed or cutting, be sure to release the brake. Attempting to perform material feed or cutting with the brake engaged may make normal feed impossible and cause the material to slip and cause a motor error.

Procedure

❶

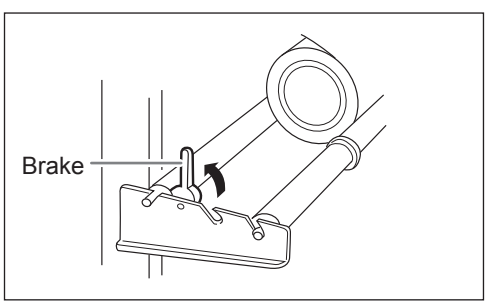

Place the roll material on the shaft and engage the brake for the shaft.

❷

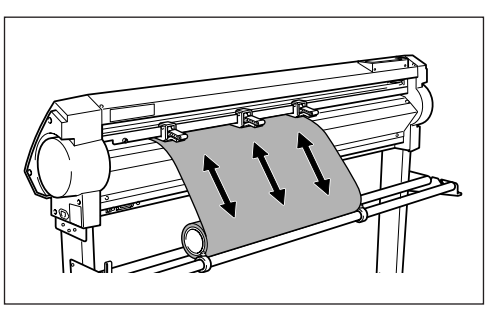

Pull out the material from the roll and pass it through the unit.
Stretch taut, with no slackness.

❸ **Position the left and right pinch rollers as shown in the figure.**

Position the middle pinch roller at the center between the left and right pinch rollers. If a grit mark is present between the left and right pinch rollers, position the middle pinch roller above the corresponding grit roller.

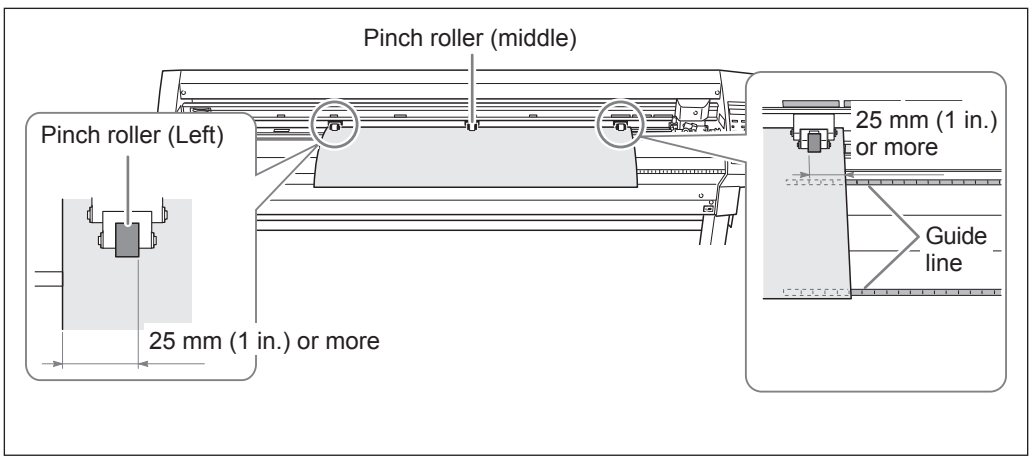

❹

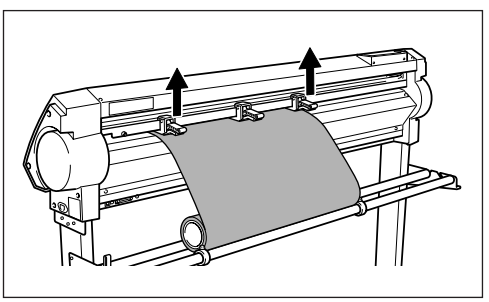

While keeping the material stretched taut, raise the sheet loading levers to secure the material in place.

❺

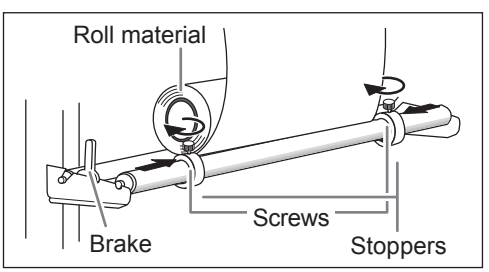

Position the stoppers so that they lightly touch the edges of the roll, and secure in place by tightening the screws.

❻

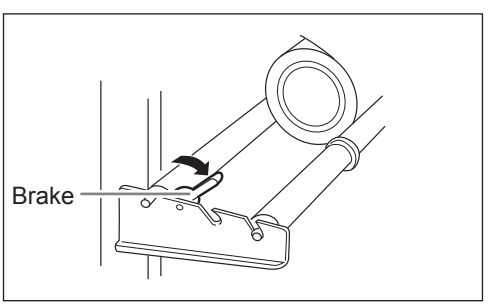

Release the brake.

❼ SELECT SHEET
*ROLL

Press [▲] [▼] to select [ROLL]
Press [ENTER] to enable the setting.

❽ UNSETUP

Press [MENU] several times until the screen shown in the figure appears.
Press [▼].

❾ CONDITION

Perform the test feed of the material by following the procedures of and after ❸ on P. 40 "Material Test Feed."
If the material is crooked and looks like it might come loose from the pinch rollers, press [PAUSE], and hold down [ENTER] for 0.5 seconds or longer to stop material. Then, load the material again.

Repeating the Same Cutting

The Replot feature lets you repeat cutting multiple times using the same cutting data, without having to send data from the computer each time.

About the replot feature
The Replot feature performs cutting using all the data stored in the machine's replot memory. This means that when you perform replotting, then before you send the data to be replotted from the computer, you need to delete the data in the replot memory.

1. Delete the data in the replot memory.

❶

Press [MENU] several times until the screen shown in the figure appears.

❷

Press [▲] several times until the screen shown in the figure appears.
If "NO DATA" is displayed here, skip ahead to procedure ❹.
Press [►].

❸

Press [▲] [▼] to select [CLEAR].
Press [ENTER] to enable the setting.
The data in the replot memory is deleted.

❹ 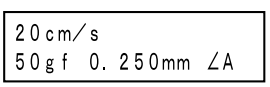

Press [MENU] to go back to the screen shown in the figure.

2. Start replotting.

❶

Press [MENU] several times until the screen shown in the figure appears.

❷

Press [▲] several times until the screen shown in the figure appears.
Press [►].

❸ 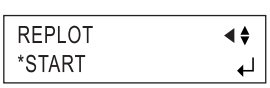

Press [ENTER].
Replotting starts.

Front Loading

What is the Front Loading

The front loading is a method to load the roll material on the front of the machine. This is available when the sheet hanger (with the special accessory stand: PNS-642/502/402/302) is attached to the front face of the machine. For information on how to attach the sheet hanger, refer to the user's manual for the sheet hanger.

Loading Material

Procedure

❶ **Refer to the page 26 "Loading the Material (Roll Material)" and load the material.**

❷

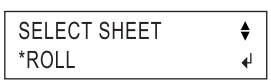

When the left figure is displayed, press [▲] [▼] to select either [ROLL] or [R-EDGE].
Press [ENTER] to enable the setting.

Do not select [F-EDGE].

❸ **Set a origin point.**
Follow the steps in "About the Origin Point and the Cuttable Area" in the next section to set a new origin point. In particular, not that if you have selected [R-EDGE], cutting cannot be performed unless you set a new origin point.

POINT!

Press [▲] to send back the material by several centimeters, and start the cutting test. For the cutting test, the origin setting is not necessary.

About the Origin Point and the Cuttable Area

For front loading, the [SELECT SHEET] setting made when you load the material must be set to either [ROLL] or [R-EDGE]. The origin-point location and the area where cutting is possible are as shown below. (The figure shows the case where [ROTATE] is set to [0 deg].)

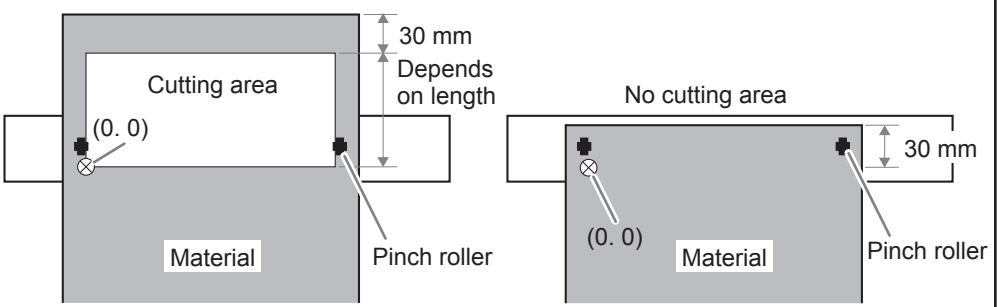

[ROLL]
Set near the left-hand pinch roller

[R-EDGE]
Set at the inner left edge of the material

The material is always fed toward the front of the machine as cutting proceeds. This is why the area where cutting is possible is to the rear of the origin point. This means that even when the setting is [R-EDGE] or [ROLL], it is necessary to feed the material toward the rear and then set a new origin point to make the required cutting area available.

With front loading, you can use either of two methods to make the required cutting area available. One is to use the [AREA] feature on the operation panel, and the other is to use the CAMM-1 driver.

Setting the Cutting Area Using the Operation Panel

Procedure

1. **Make sure the brake is released.**

2. UNSETUP ◂▴ ↵

   Press [MENU] several times until the screen shown in the figure appears.
   Press [▼].
   Press [►].

3. AREA 1.0m ◂▴ ▸

   Press [▲] several times until the screen shown in the figure appears.
   Press [►].

❹ 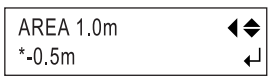

Press [►] to show the screen in the figure.
Press [▲] [▼] to set the required material length for cutting.
Set the length to a negative value. (A negative value signifies material feed toward the back.) Set a value that is about 0.2 meters longer than the value for the required material length in the cutting data.
Press [ENTER] to enable the setting.
This feeds the set length of material toward the rear of the machine. After material feed, the new origin point is automatically set at the lower left of the cutting area made available.

❺ 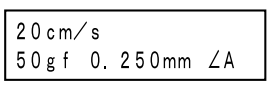

Press [MENU] to go back to the screen shown in the figure.
If the material is crooked and looks like it might come loose from the pinch rollers, or actually does come loose, reload the material.

POINT!

In addition to the preceding method, you can also set the origin point by using [▲] [▼] to feed out the required length of material to the rear of the machine, then pressing [ORIGIN].
☞ P. 40, "Setting the Origin Point"

Setting the Cutting Area Using the CAMM-1 Driver

When you use the CAMM-1 driver to select [Front Loading], the required cutting area is set by the computer.

Procedure

❶ **Refer to the page 26 "Loading the Material (Roll Material)" and load the material.**

❷ 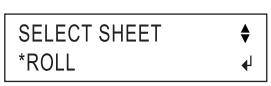

When the left figure is displayed, press [▲] [▼] to select either [ROLL] or [R-EDGE].
Press [ENTER] to enable the setting.

❸ **At the CAMM-1 driver's Properties window, click the [Options] tab, then select [Front Loading].**
On the [Size] tab, make the setting for [Cutting Area].
The cutting area of the size you set here is made available.

❹ **Send cutting data from the computer.**
The material is fed toward the back without any cutting performed. A new origin point is set and the cutting area of the size you had set in procedure ❸ is made available automatically. Cutting then starts. When cutting has finished, the tool returns to the origin point. If you are going to send another set of cutting data, leave the location of the tool unchanged.

POINT!

The tool position when cutting starts is used as the point of origin for automatically making the cutting area available using [Front Loading]. It makes no difference where the origin point has been set. Present position of the tool is used as the point for origin in not only feed direction but also right and left direction.

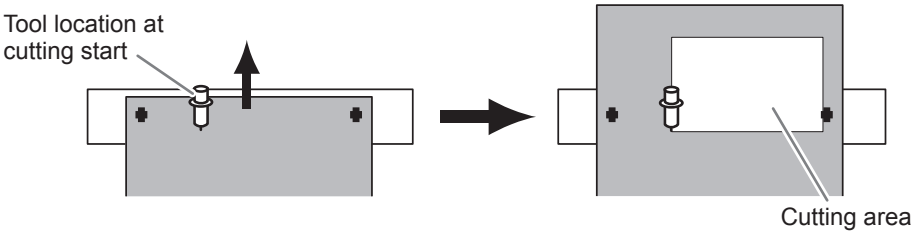

The Overcut Feature

About the Overcut Feature

When using the overcut feature, extra 1 mm is cut from the beginning and the end of the line. This is effective when you want to finish with angles that are especially sharp, such as when cutting thick material. This should normally be left set at [DISABLE]. When you want to cut especially attractive corners, set it to [ENABLE]. Note that when you are cutting small text and intricate shapes, cutting-in may occur on the portion of the material you are using, and so this should be set at [DISABLE]. Cutting results differ as shown in the following figures depending on whether the Overcut function is disable or enable.

OVER CUT: DISABLE

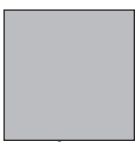

Cutting line

OVER CUT: ENABLE

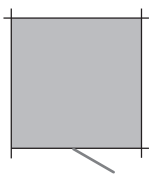

Cutting line

Setting Overcutting to [ENABLE]

Procedure

❶

Press [MENU] several times until the screen shown in the figure appears.

❷ 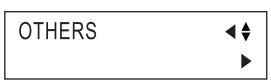

Press [▼] several times until the screen shown in the figure appears.
Press [►].

❸

Press [▲] several times until the screen shown in the figure appears.
Press [►].

❹

Press [▲] [▼] to select [ENABLE].
Press [ENTER] to enable the setting.

❺ 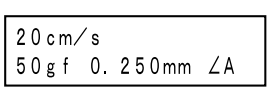

Press [MENU] to go back to the screen shown in the figure.

The Memory Feature

About the Memory Feature

When using the memory feature, 8 types of cutting conditions can be set and stored in accordance with the tools and the material.
The stored settings can be called up easily by pressing [MEMORY].

To Store in Memory

Procedure

❶ **Use the display menu to make the settings for cutting conditions matched to the tool and material in use.**
You can set the following five types of parameters.
- Blade force: [FORCE]
- Offset: Menu mode [OFFSET]
- Cutting speed: [SPEED]
- Cutting quality: Menu mode [QUALITY]
- Up speed: Menu mode [UP SPEED]

❷

Press [MENU] several times until the screen shown in the figure appears.
Press [▲].

❸ 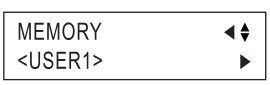

Press [►].
Press [▲].
Press [►].

❹ 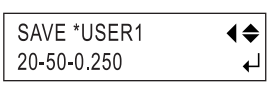

Press [▲] [▼] to select the user number for the conditions you want to store in memory.
Press [ENTER] to enable the setting.

❺ 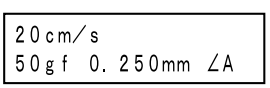

Press [MENU] to go back to the screen shown in the figure.

When you store to a user number, any cutting conditions already stored to the number are automatically updated (overwritten) with the newly set parameters. If you want to keep the previous cutting conditions, store them to a different number. You can store up to eight types of cutting conditions using the steps described above.

Calling Up

Procedure

❶ **Press** MEMORY **.**

❷

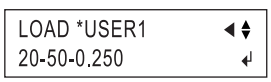

Press ▲ ▼ **to select the user number you want to call up.**
Press ENTER **to enable the setting.**

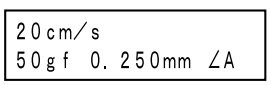

The parameters set to the selected user number appear on the display.

Deleting Settings

You can delete the stored settings for cutting conditions, returning them to their factory defaults. Please note that all user numbers from 1 to 8 are deleted. (This resets to their default values not only the memory settings, but also all menu settings.)

Procedure

❶

Press MENU **several times until the screen shown in the figure appears.**

❷

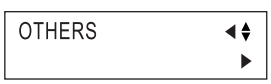

Press ▼ **several times until the screen shown in the figure appears.**
Press ► **.**

❸

Press ▲ **several times until the screen shown in the figure appears.**
Press ► **.**

❹

Press ENTER **to enable the setting.**

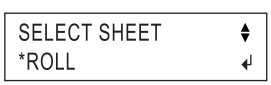

The screen shown in the figure appears.

The Crop Mark Feature

About the Crop Mark Feature

The crop mark feature is used when cutting around the previously printed images is performed with application software where the printing data and the cutting data operate simultaneously.
Crop marks are the marks used for alignment when cutting the printed material on the cutting machine. Saving on the machine the locations of the crop marks oriented together with the image makes it possible to adjust the location to cut. When you use this feature, the operation method differs according to the program you're using.

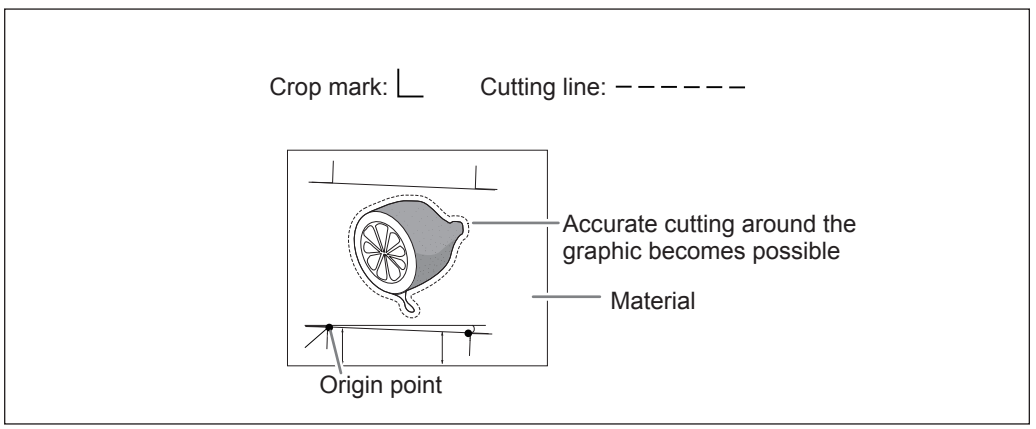

Using the Included Program

Using the included Roland CutStudio program enables you to print, together with the image, crop marks that the machine's sensors can automatically detect, then perform alignment automatically and carry out cutting. For information on how to perform this operation, see the electronic-format manual ("Printing and Cutting Guide" (for Windows) or "Macintosh Cutting Guide" (for Macintosh).)

Using a Program Other Than the Included Program

1. Create the data.

When you use the program to add crop marks to the figure, take the margins required for cutting into account when you decide on the locations of the crop marks. Refer to the figure below to place them at appropriate locations.

- You can choose to use either three or four crop marks. It may be Mark 3 Mark 4 best to select four when you want to perform more-precise alignment or three when you want to shorten the operating time required. When you're performing alignment using three crop marks, draw the crop marks at the locations in the figure labeled "Mark 1," "Mark 2," and "Mark 3."
- When you're using material with a large amount of feed (lengthy material), we recommend ensuring left and right margins of about 25 mm (1 in.) each.
- Be sure to make a note of the distances between the crop marks (distance X and distance Y in the figure below). These need to be entered into the machine later.
- There are no rules specifying the shape of the crop marks, but using square-angle shapes like those shown in the figure can facilitate alignment.

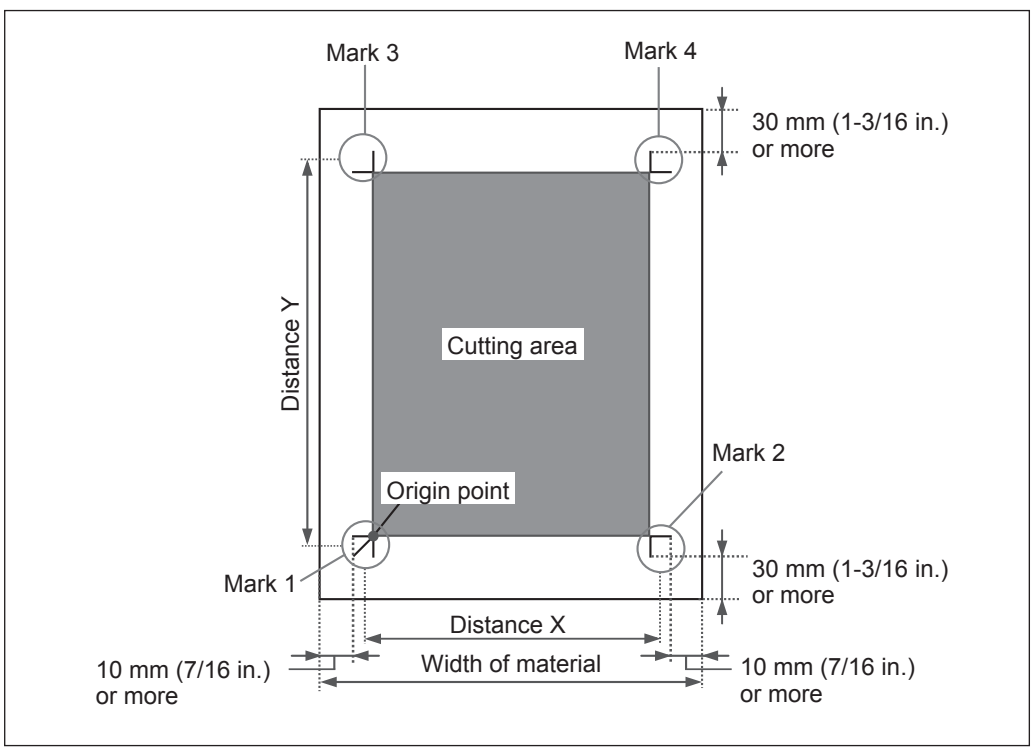

2. Get ready to perform cutting.

When you have completed the figure data containing crop marks, print the material. Load the material (printed with a figure), and install the included alignment tool (refer to the page 26 "Loading the Material (Roll Material)," page 35 "Installing a Blade," and page 70 "Using the Cut Material"). The way of installing the alignment tool is the same as for the blade holder.

3. Select the operation mode and enter the setting values.

Set the [CROPMARK] menu item to [MANUAL], then manually enter the values such as the distances between the crop marks you drew when you created the figure.

❶ 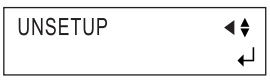

Press [MENU] several times until the screen shown in the figure appears.

❷

Press [▼] several times until the screen shown in the figure appears.
Press [►].

❸

Press [▲] [▼] to select [MANUAL].
Press [►].

❹

Press [▲] [▼] to select [BASIC SETTINGS].

❺

Press [►] several times until the screen shown in the figure appears.
Press [▲] [▼] to enter the horizontal distance between the crop marks.
Press [ENTER] to enable the setting.

❻

Press [▼] [►] to show the screen in the figure.
Press [▲] [▼] to enter the vertical (lengthwise) distance between the crop marks.
Press [ENTER] to enable the setting.

❼ 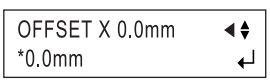

Press [▼] [►] to show the screen in the figure.
Press [▲] [▼] to enter the horizontal distance between the origin point for the cutting location and the origin point for printing.
This is normally set at 0 mm.
Press [ENTER] to enable the setting.

❽ 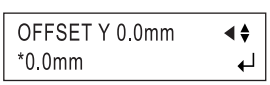

Press [▼] [►] to show the screen in the figure.
Press [▲] [▼] to enter the vertical (lengthwise) distance between the origin point for the cutting location and the origin point for printing.
This is normally set at 0 mm.
Press [ENTER] to enable the setting.

4. Perform cutting.

First use the alignment tool to line up the tip of the alignment tool with the leading edge of the crop marks, then send the cutting data.

❶

Press [◄] to show the screen in the figure.
Press [▲] [▼] to select either [4-POINT START] or [3-POINT START].
Press [ENTER] to enable the setting.
For four crop marks, select [4-POINT START]. For three crop marks, select [3-POINT START].

The screen shown in the figure appears.

❷ **Make sure the alignment tool is mounted.**
Press [ENTER].

The tool moves to stop near the lower-left crop mark (mark 1), and the screen shown in the figure appears.

❸

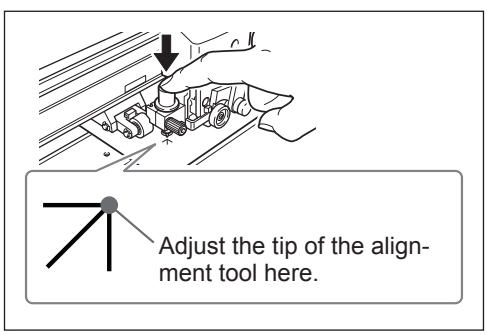

Press [▲] [▼] [◄] [►] to align the tip of the alignment tool with the crop mark.
With your finger, press down lightly on the alignment tool to make sure its tip lies over the crop mark.

❹ **Press [ENTER].**

The tool moves to near the lower-right crop mark (mark 2) and the screen shown in the figure appears.

❺

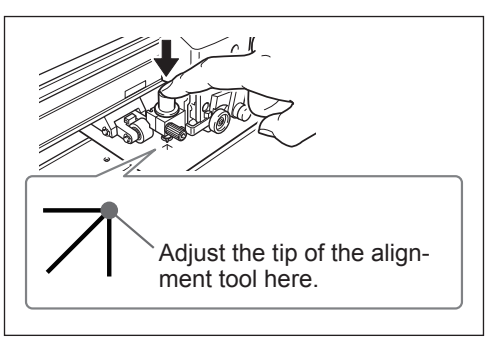

In the same way as for mark 1, align the tip of the alignment tool with the crop mark.
Press [ENTER].

6 Follow the same procedure to perform alignment for mark 3 (and if the [4-POINT START] setting is selected, for mark 4 as well).

REPLACE WITH BLADE
(RETURN ▶ MENU) ↵

When you've finished performing alignment for mark 3 (or mark 4), press ENTER to display the screen shown in the figure.

7 Remove the alignment tool and install the blade holder.

If for some reason you want to go back to an earlier step in these settings, such as to redo alignment, pressing MENU displays the previous screen, where you can redo the settings.

8 Press ENTER .

COMPLETED ▶ ENTER
STOP ▶ MENU ↵

The screen shown in the figure appears.
When you've finished making the settings, then to perform cutting, press ENTER .

20cm/s
50gf 0.250mm ∠A

Pressing MENU cancels the settings and returns you to the screen shown in the figure.

9

OUTPUT DATA

Make sure that the screen shown in the figure flashes, then send the data from the computer.
Cutting starts when the data is received.

20cm/s
50gf 0.250mm ∠A

When cutting finishes, the screen shown in the figure appears.

If the Printing and Cutting Positions Are Misaligned

If the printing and cutting positions are misaligned, as shown in the figure below, use the display menu to adjust [OFFSET X] and [OFFSET Y] as described below.

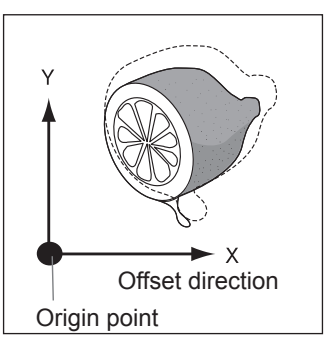

➢ **If it is displaced to the right…**
If it is displaced to the right, make the value of [OFFSET X] larger. If it is displaced to the left, make the value smaller. In the case shown in the figure, the [OFFSET X] value needs to be made larger.

➢ **If it is displaced upward…**
If it is displaced upward, make the value of [OFFSET Y] larger. If it is displaced downward, make the value smaller. In the case shown in the figure, the [OFFSET Y] value needs to be made larger.

Performing Test Feed of Material Automatically

This makes the setting for performing test feed of the material automatically before cutting starts. It is intended to prevent motor errors or misalignment due to roll material being pulled out at the feed rate used during cutting. The test feed is performed for the required distance as determined by the size of the cutting data. Performing test feed also lets you check to ensure that the material is not loaded at an angle.
This setting is turned off in the following cases.

- When the selection for [SELECT SHEET] is "PIECE" or "TRAILING EDGE."
- When the front-loading feature is used.

☞ > P. 70, "Using the Cut Material," p. 57, "Front Loading"

Procedure

* You make this setting using the CAMM-1 driver.

1. **Open the CAMM-1 driver Properties window, click the [Options] tab.**
2. **In "Before Cutting," select [Feed before Cutting].**
3. **Click [OK] to close the CAMM-1 driver Properties window.**
3. **Make sure the brake is released.**
3. **Send cutting data from the computer.**

☞ P. 41 "Downloading the Cutting Data"

Using Various Kind of the Materials

Using the Cut Material

*** About cut material**

Material not wound onto a paper tube such as standard-size media

POINT!

If the material strikes the shaft during cutting, remove the shaft.

Procedure

❶

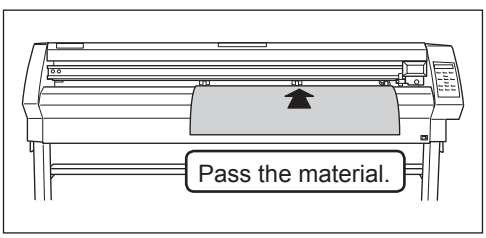

Lower the sheet loading levers and pass the material between the pinch rollers and the grit rollers.

❷ **Follow procedure ❹, ❺, and ❻ of "Loading the Material (Roll Material)" to load a piece of material.**

❸

Press ▲ ▼ to select [PIECE].
Press ENTER to enable the setting.

The tool carriage will move from side to side and the material will move forward and backward to detect the size of the material. When sensing ends, the display shows the loaded material size.

If the material is misaligned and looks like it might come loose from the pinch rollers, or actually does come loose, please reload the material.

* For more information about the cutting area, refer to the page 49 "Details of the Origin-point Location and Cutting Area."

POINT!

If a pinch roller is positioned over an area where there is no grit roller, the message shown in the figure appears when you press ENTER. If this occurs, lower the sheet loading levers and move the pinch rollers to the proper positions above the grit rollers. Reposition the material to match this new alignment, then lift the sheet loading levers to hold the material in place.

Using the Material Easy to be Winkled/Hard to be Fed

*** This feature can be used on the only GX-640.**

The platen uses suction to grip the media and keep it stable. The suction force can be adjusted corresponding to the mature and condition of the media. This is useful when the media is hard and floating above the platen, or when the media is thin and sticking to the platen.

Procedure

1.

   Press [MENU] several times until the screen shown in the figure appears.

2. 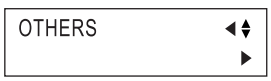

   Press [▼] several times until the screen shown in the figure appears.
   Press [►].

3. 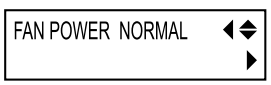

   Press [▲] several times until the screen shown in the figure appears.
   Press [►].

4. 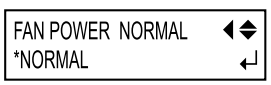

   Press [▲] [▼] to select the setting value.
   Press [ENTER] to enable the setting.
   Setting value: -5 to -1, Normal, +1 to + 5
   Set a greater value when the material is prone to float, while set a smaller value when it is prone to stick.

5. 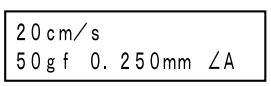

   Press [MENU] to go back to the screen shown in the figure.

Important Note and Advice in Using Special Material

This section describes some tips and important notes when using special materials with this unit. Note, however, that depending on various factors or the usage environment, the use of some materials with this unit may not be possible. Before actual use, carry out test feed and a cutting test to make sure the material is suitable for use with this unit.

Rubber materials for sandblasting stencils

It is important to note that the weight of the material may make motor errors more likely to occur. In order to cope with the weight of the material, we recommend to you the following settings and method to load the material.

- Set [QUALITY] to [HEAVY] .

☞ P. 88, “Description of Menu Items ([CONDITION] – [QUALITY])

- We advise you to use the material after cutting it to below 500mm length. When the length is over 500mm, load the material so that the distance from its lower end hanged down to the platen will be below 500mm.
- If material feed is not smooth, creating an area of only carrier paper about 15 millimeters wide at both flanks of the material and positioning the pinch rollers above these strips of carrier paper can make material feed more stable.

Material with sprocket-feed holes

Material for sprocket-feed use has feed holes along both edges. If the material is loaded with these holes lying over the pinch rollers, material feed cannot be performed correctly. When you are using this with this machine, load it as shown in the figure.

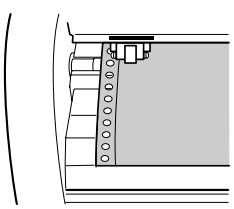

About the Separating Knife

It may not be possible to sever some thicker materials (such as rubber sandblasting templates) or thin, flimsy materials. Material with a strong tendency to reroll (that is, with a warp in the direction of the cutting surface) may catch on the carriage after being cut off. Do not sever those materials with the separating knife.

When using the heavy material

Note that, when the heavy material is left loaded for a period of time, it may fall from the machine due to its own weight and cause malfunctions of the machine as it becomes overloaded with the pinch rollers. When the heavy material is used, set [QUALITY] for cutting to [HEAVY].

☞ P. 88, “Description of Menu Items ([CONDITION] – [QUALITY])

Chapter 4
Maintenance / FAQ

Maintenance 74
- Cleaning 74
- Consumable Items.....75
- How to Replace the Separating Knife.....76
- Self-test Operation Check 77

What to Do If ….. 78
- The Machine Doesn't Run. 78
- Cut Lines Are Uneven or Not Cut Attractively. 79
- Uncut Areas Remain or the Material Is Not Cut.....79
- The Carrier Paper Is Cut 80
- The Material Rise Up During Cutting, and the Blade Scratches the Material.....80
- The Start and End Points for Cutting Are Not Same 80
- Blank Areas Are Produced On the Material.....80
- Flat Material Cannot be Set Up As "PIECE" (the length is not displayed).....81
- The Material Slips Away From the Pinch Rollers During the Cutting Process.....81
- A Message Appears.....82
- Responding to an Error Message.....82

Cleaning

NOTICE

- Always turn off this machine before cleaning it.
- Never lubricate the mechanisms.
- Do not clean with solvents (such as benzine or thinner).

Cleaning the body

Use a cloth moistened with water then wrung well, and wipe gently to clean. Wipe the operation panel and display gently with a clean, soft cloth.

Cleaning the platen

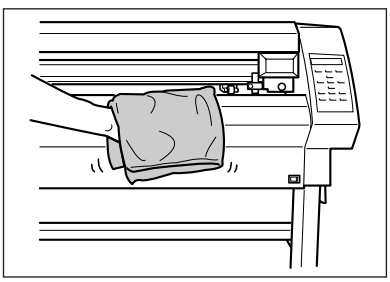

Use a cloth moistened with water then wrung well, and wipe gently to clean.

Cleaning the grit rollers

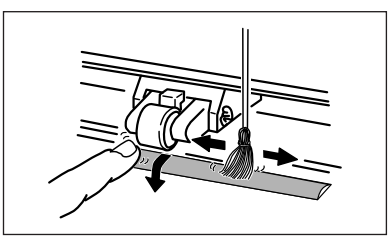

With the sheet loading levers lowered and the pinch rollers raised, use a commercially available brush to remove dust and other detritus. Brush horizontally while rotating the grit rollers.

If dust builds up it may prevent the material from being held securely, and degrade plot precision.

Cleaning the pinch rollers

Lower the sheet loading levers and raise the pinch rollers. Use a cloth moistened with water then wrung well, and wipe gently to clean.

Cleaning the blade holder cap

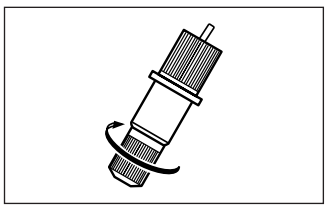

If material debris is adhering to the inner surface of the cap for the blade holder, loosen and remove the cap, then remove the material debris. If corners and curves are not cut attractively, or if cutting is discontinuous, clean the blade holder cap.

Consumable Items

Blade

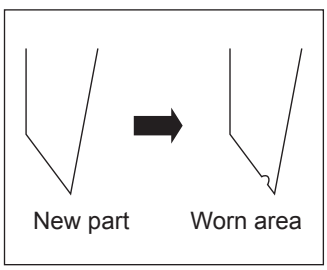

If any of the following occurs, it means the blade has reached the end of its useful life. Replace with a new blade.

- The blade tip is broken.
- Uncut areas remain even when blade force is raised 50 to 60 gf.
- Cutting traces are not as attractive as they were previously.
- When cutting details or corners, the material layer peels away from the carrier paper.

After prolonged use or cutting of hard material, the tip of the blade may become worn as shown in the figure. Attractive cutting becomes impossible in such cases, so replace with a new blade.

Blade holder

When you adjust the blade tip and carry out cutting, the cap portion of the blade holder rubs against the material as cutting is performed, and so the end of the cap gradually becomes worn. When wear is severe, the blade tip cannot be adjusted correctly, and attractive cutting becomes impossible. Replace with a new blade holder.

When the blade holder has been in use for a prolonged period, the bearing that supports the blade deteriorates, impeding rotation of the blade. Continued use while in this state may make attractive cutting impossible because the blade tip cannot rotate easily.

If corners and curves are not cut attractively, or if cutting is discontinuous, refer to page 74, “Cleaning” and clean the blade holder cap. If this does not improve the results, replacing the blade holder may bring about improvement.

Blade protector

If cutting is carried out when the amount of blade extension or blade force is not adjusted correctly, the blade tip may pierce the material's carrier paper, resulting in damage to the blade protector. Performing cutting with a damaged blade protector may make attractive cutting impossible.

When the surface of the blade protector is deformed by scratching or the like, it is necessary to replace the blade protector. Contact your authorized Roland DG Corp. dealer.

How to Replace the Separating Knife

⚠CAUTION **Make sure the power to the unit isoff before attempting to replace the separating knife.**
Doing so may result in injury.

If the separating knife is not sharp enough to cut attractively, replace it with the replacement knife included with this machine. Follow the steps below to replace the knife.

Procedure

❶

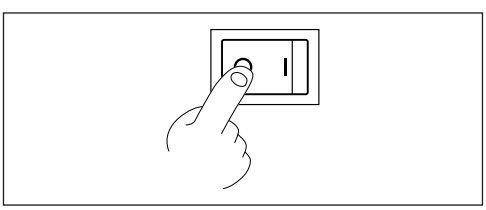

Switch off the power to the machine.

❷

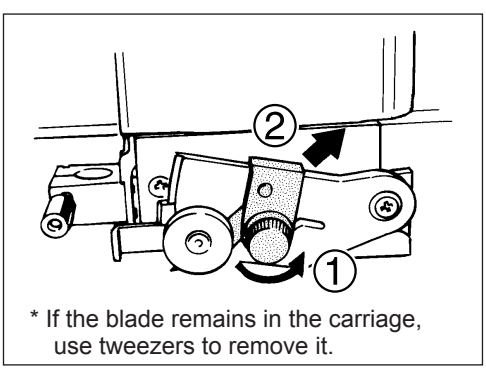

* If the blade remains in the carriage, use tweezers to remove it.

Remove the separating knife.
① Loosen the screw until it slips out.
② Grasp the screw portion, and slowly pull it out in the direction of the arrow.
Do not pull back while doing this.

❸

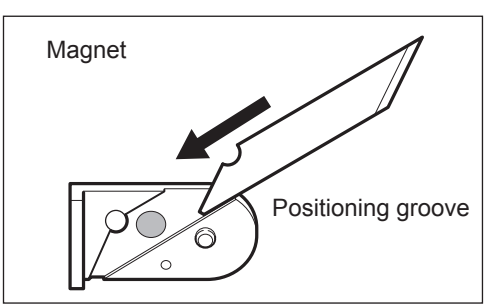

Replace with a new knife.
The knife is secured in place by the magnet.

❹

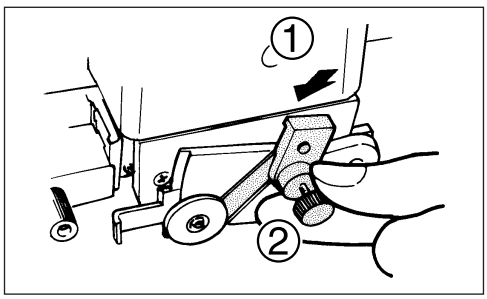

Install the separating knife.
① Grasp the screw portion and slowly insert it into the groove.
Take care to ensure that the knife does not slip.
② Tighten the screw.

As for the replacement blades after using up all the included blades, contact your authorized Roland DG Corp. dealer.

Self-test Operation Check

This machine is provided with a self-test feature for verifying that operation is correct. If this machine does not operate correctly, follow the steps below to check its operation. (No computer is required to perform an operation check.)

Procedure

❶ **Refer to page 26, "Loading the Material (Roll Material)" and load material.**

❷ **Refer to page 35, "Installing a Blade" and install the blade holder in the tool carriage.**

❸ UNSETUP ◂▴ ↵ — **Press [MENU] several times to display the left figure.**

❹ QUALITY NORMAL ◂▴ ▸ — **Press [▼] several times to display the left figure.**
Press [►]

❺ SELF TEST ◂▴ ↵ — **Press [▼] several times to display the left figure.**
Press [ENTER] to execute.

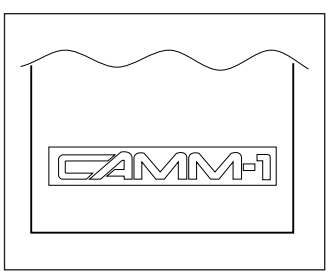

Operation is correct if the cutting shown in the figure is performed.

What to Do If .....

The Machine Doesn't Run.

Is the power cord connected correctly?

Connect the power cord bundled to the machine, and plug the other end securely into an electrical outlet.

Is the machine power on ?

Turn on the power.

Is the machine in the temporary halt state ? Is operation paused?

If the screen shown in the figure is displayed, it means that operation is paused.

☞ P. 41, "Downloading Cutting Data"

To resume cutting, press PAUSE again. Cutting resumes. To quit cutting, firstly stop the flow of cutting instructions from the computer, then hold down ENTER for 0.5 seconds or longer.

Is the machine in the setup state?

If the machine is not in the setup state (the SETUP LED is dark), cutting cannot be performed even if data is sent. Load the material correctly, then put the machine in the setup state.

☞ P. 26, "Loading the Material (Roll Material)"

Are the settings for the software driver correct?

Make the correct settings for the output port. For more information, refer to the "Installation and Setup Guide" on the included CD-ROM.

Are the computer and the machine connected correctly?

Correctly connect the computer and the machine. For more information, refer to page 20 "Rear" or the "Setup Guide."

Is the OS set up correctly ?

Check the following items:
• Output port selection • Output device selection • Output command
• Other settings
Check the OS's user's manual and set it up correctly.

Are the application software settings correctly ?

When specifying the output device, select the name of a model that supports the instruction set. If the instruction set is different, completely different instructions may be sent, resulting in an error. Settings for the output origin point and the like may also be required. Check the software user's manual and set it up correctly.

Cut Lines Are Uneven or Not Cut Attractively.

Are the blade and blade holder installed correctly and securely ?

Install them tightly enough not to loose.

☞ P. 35, “Installing the Blade”

Are there material debris in the blade holder?

Remove the cap from the blade holder and clean out the debris.

☞ P. 74, “Cleaning”

Is a thick material being used?

When you are using thick material, set the [QUALITY] to [HEAVY].

☞ P. 46, “Detailed Cutting-condition Settings”

When you are using thick material, set the [QUALITY] to [HEAVY].

Replace with a new blade holder.

☞ P. 75, “Consumable Items”

Is the blade protector damaged?

Replace with a new blade protector..

☞ P. 75, “Consumable Items”

Replace with a new blade protector.

Set at an appropriate value.

☞ P. 46, “Detailed Cutting-condition Settings”

Also, depending on the program you're using, you may be able to set the offset with the program. In such cases, make sure that the program setting does not conflict with the machine's setting.

Uncut Areas Remain or the Material Is Not Cut

Is the blade chipped ?

If it is, replace it with a new one.

☞ P. 35, “Installing the Blade”

Are blade force, blade offset, and cutting speed appropriate for the material being cut?

Carry out a cutting test and set the appropriate values.

☞ P. 46, “Detailed Cutting-condition Settings,” p. 38 “Adjusting the Blade Force,” p. 39 “Adjusting the Cutting Speed”

The Carrier Paper Is Cut

Are the amount of blade extension and blade force appropriate for the material being cut?

Adjust the amount of blade extension and the blade force appropriately.

☞ P. 46, “Detailed Cutting-condition Settings,” p. 38 “Adjusting the Blade Force,” p. 39 “Adjusting the Cutting Speed”

The Material Rise Up During Cutting, and the Blade Scratches the Material

Is wide material being used?

When using material having a width grater than 762 mm (30 in.), lower the middle pinch roller at a position over a grit roller near the center of the material.

Is the up speed too fast?

Use the menu to lower the setting for [UPSPEED].

☞ P. 46, “Detailed Cutting-condition Settings”

The Start and End Points for Cutting Are Not Same

Are the blade and blade holder installed correctly and securely ?

Install them correctly and securely enough not to loose.

☞ P. 35, “Installing the Blade”

Are you using thick or hard material?

When you are cutting thick or hard material, the start point and end point might not be same.

Blank Areas Are Produced On the Material

Are the blank areas due to the specifications?

Mechanical limitations produce margins at the front, back, left, and right of the material

☞ P. 49, “Details of the Origin-point Location and Cutting Area”

Flat Material Cannot be Set Up As “PIECE” (the length is not displayed)

Is the length 1.6 m (63 in.) or longer?

Attempting to set up flat material having a length of 1.6 m or longer as [PIECE] causes the material to be recognized as roll material.

☞ P. 49, “Details of the Origin-point Location and Cutting Area”

The Material Slips Away From the Pinch Rollers During the Cutting Process

Is a material with sprocket holes being used?

If a material with holes for sprocket feed is being used, placing the pinch roller above the hole portion may cause the material to slip. Be sure to set the pinch roller over the material to the inner side of the hole portion.

When a flat material (such as a standard size material or piece material) has been loaded, has the “PIECE” setting been selected for the material type?

When loading the material, select [PIECE] for the [SELECT SHEET] display menu.

☞ P. 70, “Using the Cut Material”

Is the material being cut blocked at some position?

Make sure that the left and right edges of the material do not touch the inner surfaces or the shafts of the machine during cutting. Such contact may not only damage the material, but could also make normal material advancing impossible and cause the material to slip.

Is the material being loaded parallel to the grit rollers?

When the front edge of the material is cut diagonally, cut off the odd-shaped part to make it straight, then align it so that it is parallel to the grit roller. When the material is fed for a long distance, the material will be less likely to slip out of alignment if the pinch rollers are moved inward slightly (5 to 25 mm). When a roll material is loaded, use the display menu [AREA] function to feed a material by the length to be used (ensure a small margin by setting a length that is about 0.2 m longer than the cutting data), make sure the pinch rollers are still in contact with the material (not off the left or right edges, or on the edges), and then cut. If the material is pulled while cutting it is more likely to halt because of material misalignment and motor errors.

Are the sheet loading levers lowered?

The material is not secured in place. Make sure the left and right pinch rollers are inside the edges of the material, then raise the sheet loading levers.

Are the pinch rollers damaged or deformed?

If the material comes loose even when it is loaded correctly, the useful life of the pinch rollers has ended. If this happens, contact your authorized Roland DG Corp. dealer. Also, when you are not performing cutting, leave the sheet loading levers lowered and the pinch rollers raised.

A Message Appears

TOOL-CHG: TOOL No

The machine is in standby for tool replacement.
If tool replacement is not necessary, then simply press ENTER . The [SP CMD] menu item should normally be set to [DISABLE].

DATA OVERFLOW

The data size is too large to process.
Reduce the data size and send the data from the computer again.

Responding to an Error Message

An error message will appear if incoming data has any of the errors listed in table. However, the error is shown in the display for informational purposes, the data transfer continues and you are allowed to perform the next operation. To clear the display, press any key. If an error occurs, correct cutting may become impossible.

The error messages that may appear on the display are described below. In almost all cases, the cause is receiving incorrect data.

☞ P. 78, “The Machine Doesn’t Run”

If the action described here does not correct the problem, or if an error message not described here appears, contact your authorized Roland DG Corp. dealer .

BAD POSITION

The location of one or more of the pinch rollers is not correct.
Press ENTER to clear the error, then reload the material correctly.

☞ P. 26, “Loading the Material (Roll Material)”

SHEET UNLOADED

This is displayed when the material has been loaded at a position where the sheet sensor does not function.
Follow the steps under on page 26 “Loading the Material (Roll Material)” to load the material so that it is positioned above the sheet sensor.
This is displayed when the material is removed after pressing ENTER .
Load a material and press any key to cancel the error message.

MOTOR ERROR

Shows motor error status.
This is displayed when the machine experiences excess load, such as for one of the following reasons:

- Cutting was performed with thick material loaded.
- Cutting was performed without first feeding out the material, and the material was then pulled out suddenly during cutting.
- The material has jammed.

If this happens, reset the power using the power switch. (If the material is jammed, then before you switch

the power back on, remove the material.)
For large cutting data with a roll material, use the [AREA] function on the display menu to feed the roll material by the length of the cut (ensure a small margin by setting a length that is about 0.1 m longer than the cutting data).

☞ P. 41, “Downloading Cutting Data”

Also, by using the settings for the CAMM-1 driver, you can make the setting for performing test feed of material automatically before cutting starts.

☞ P. 69, “Performing Test Feed of Material Automatically”

When you are using thick material, change the [QUALITY] setting from [NORMAL] to [HEAVY].

☞ P. 88, “Description of Menu Items ([CONDITION] – [QUALITY])

If the foregoing message appears and operation stops even when you perform cutting while set to [HEAVY], switch the power off and back on, then press SPEED and set [** cm/s] to a smaller value.

Er1: WRONG COMMAND

Appears if an instruction that the machine cannot interpret is sent.

Er2: WRONG NO.S

Appears if the number of parameters differs from the permissible number.

Er3: OUT OF RANGE

Appears if the value specified for a parameter is out of the permissible range.

Er15: RS-232ERR

Appears if framing error, parity error or overrun error occur when data is perceived.

OUT OF CUTTING RANGE

Appears if the crop mark or the origin point is being specified out of the material.
Set the crop mark or the origin point within the material.

☞ P. 40, “Setting the Origin Point,” p. 64, “Crop Mark Feature”

CROPMARK ERR WIDTH NG

The crop mark 2 is out of the position by over 20mm in the carriage direction.
Reset the crop mark 2.

☞ P. 64, “Crop Mark Feature”

CROPMARK ERR LENGTH NG

The crop mark 3 is out of the position by over 20mm in the sheet direction.
Reset the crop mark 3.

☞ P. 64, “Crop Mark Feature”

CROPMARK ERR ANGLE TOO BIG

The crop mark 2 or 3 is tilted at over 5 degrees.
Reset the crop mark 2 or 3.

☞ P. 64, “Crop Mark Feature”

SET TO <SENSOR MODE> DATA DISCARDED

The data with PJL is transmitted in the [Manual] mode of [CROPMARK].

The data will be discarded. Change the setting of [CROPMARK] to [SENSOR MODE], or check the data.

☞ P. 64, “Crop Mark Feature,” p. 88“Description of Menu Items”

SET TO <0 deg> DATA DISCARD

The data with PJL is transmitted when the setting of [ROTATE] is at [90 deg].

The data will be discarded. Change the setting of [ROTATE] to [0 deg], or check the data.

☞ P. 51, “Coordinate Rotation Settings,” p. 88“Description of Menu Items”

Chapter 5
Main Specifications

Selecting the Material and Blade 86
- Material and Blade Combinations 86

List of Functions 87
- Control-key Functions 87
- Description of Menu Items 88

Locations of the Power Rating and Serial Number Labels 93
- Locations of the Power Rating and Serial Number Labels 93

Interface Specifications 94
- Serial 94
- USB 94
- Serial connector 94
- USB connector 95
- XY-RS-34 serial cable connection 95

Specifications 96

Selecting the Material and Blade

Material and Blade Combinations

The table below is a general guide to suitable blades and cutting conditions for various types of material, as well as to blade lifespan and other values under the respective conditions. Refer to it when selecting the material and blade. Cutting conditions and blade life vary according to the hardness of the material and the usage environment. Before you perform actual cutting, be sure to carry out a cutting test and make any necessary adjustments.

☞ P. 38, "Adjusting the Blade Force," p. 39, "Adjusting the Cutting Speed"

If the material is not cut through completely even when the blade force is increased by 50 to 60 gf more than the blade force values shown below, it means that the useful life of the blade has ended. Replace with a new blade.

Material	Blade	Blade force	Speed	Blade offset	Life of a blade
General Signage Vinyl	ZEC-U1005	50 to 150 gf	85 cm/sec.	0.25 mm	8000 m
General Signage Vinyl Fluorescent Vinyl Reflective Vinyl	ZEC-U5025	30 to 100 gf 120 to 200 gf 100 to 200 gf	85 cm/sec. 85 cm/sec. 85 cm/sec.	0.25 mm 0.25 mm 0.25 mm	4000 m 4000 m 4000 m
Rubber material for sandblasting stencil	ZEC-U1715	100 to 200 gf	20 cm/sec.	0.25 mm	Varies according to material type
Signage vinyl (material thickness 0.1 mm or less)	ZEC-U3017	100 gf or less	85 cm/sec.	0.175 mm	4000 m

- All values are intended to serve only as a general guide.
- When you are cutting small text (character height of 3 mm for alphanumeric characters or more), ZEC-U3017 can produce more attractive cutting results than other blades.
- Use the included blade under conditions equivalent to those for the ZEC-U5025.

List of Functions

Control-key Functions

This describes the functions of the control keys when pressed.

Key	Function	Range	Default
MEMORY	This calls up user-set cutting conditions matched to the USER1 to 8 – tool and material in use.	USER1 to 8	–
FORCE	This sets the force for the blade during cutting. 20 to 350 gf 50 gf Perform a cutting test and set the conditions to match (10 gf step) the loaded material and the installed blade.	20 to 350gf (10gf step)	50 gf
SPEED	This sets the speed for the blade during cutting. 1 to 85 cm/s 20 cm/s Perform a cutting test and set the conditions to match (1 cm/s step) the loaded material and the installed blade.	1 to 85 cm/s (1 cm/s step)	20 cm/s
CURSOR ([▲]) ([▼]) ([◄]) ([►])	These move the material and the carriage. When a menu is displayed, these change the menu items and setting values.	–	–
PAUSE	This pauses cutting. The PAUSE LED lights up while operation is paused. Pressing this a second time cancels the paused state. Holding down [ENTER] for 0.5 seconds or longer while paused quits cutting. This key is also effective when performing material feed using the [AREA] menu.	–	–
MENU	Pressing this repeatedly switches sequentially among the presently set cutting conditions, the menu mode, and the width-display screen. Pressing this key when in the Menu mode returns you to the cutting conditions screen.	–	–
ENTER	This enables, runs, or stores the item shown on the display.	–	–
ORIGIN	Holding down this key for 0.5 seconds or longer sets the origin point at the present blade position (the blade center).	–	–
SHEET CUT	Holding down this key for 0.5 seconds or longer cuts off the material at the present position of the separating knife. Press this to sever an already-cut piece of material from a roll of material. Severing cannot be performed while cutting is in progress.	–	–
TEST	Holding down this key for 0.5 seconds or longer performs a cutting test at the present blade position. For more information, refer to the page "Adjusting the Blade Force and Cutting Speed."	–	–
MENU + Power on (LANG.)	This sets the language for messages on the display. /ENGLISH/ ENGLISH (LANG.) You can select from among seven languages: EUT/FRANC/ESPAN Japanese, English, German, French, Spanish, Italian, ITAL/PORTOG and Portuguese.	ニホンゴ/ENGLISH/ DEUT/FRANC/ESPAN/ ITAL/PORTOG	ENGLISH
Power on (SELECT SHEET)	This selects the type of material to use and enables the ROLL/PIECE/ (SELECT SHEET) setup state. For more information, refer to the page "Details of F-EDGE/R-EDGE the Origin-point Location and Cutting Area."	ROLL / PIECE / F-EDGE / R-EDGE	–

Description of Menu Items

This describes the items and functions available when you press MENU and enter the menu mode.

Menu		Function	Range	Default
UNSETUP		This cancels material setup (unsetup).	–	–
CONDI-TION	FORCE	This sets the force of the blade when the material is cut. Make the setting suitable for the material and the blade installed in consideration of the result of the cutting test.	20 to 350 gf (10 gf step)	50 gf
	SPEED	This sets the speed of the blade when the material is cut. Make the setting suitable for the material and the blade installed.	1 to 85 cm/s (1 cm/s step)	20 cm/s
	OFFSET	This sets the amount of offset for the blade during cutting. Normally, apply the offset value indicated on the cutter you are using. (The offset value for the cutters included in this package is 0.25mm.) Perform the cutting test, and adjust this setting in accordance with the loaded material or cutter if necessary. When using the included blade, cutting can be performed using the factory-default settings.	0 to 1,000 mm (0.025 mm step)	0.250 mm
	UNSPEED	This sets the speed of movement when the blade is raised and moves to the next position for cutting during a cutting operation.	AUTO / 10 to 50 cm/s (10 cm/s step)	AUTO
	ROTATE	This rotates the cutting coordinate origin by 90 degrees. The default setting is [0deg], which means that the origin is at the bottom left of the material. Setting this to [90deg] moves the origin to the bottom right of the material, thereby rotating the cutting pattern by 90 degrees. * Don't forget that the coordinate axis changes when the origin is rotated.	0 deg / 90 deg	0 deg
	AREA	This moves the material by the length to be cut before actual cutting is performed, making it possible to ensure that the material will not slip or come loose during cutting. When performing ontinuous cutting on the same material, this can also be used to make sure that there is enough remaining material to cut the data that will be sent. When you are performing front loading, this feeds the specified length of material to the rear to ensure the cutting area, and shifts the origin point. You can pause or stop material feed by pressing PAUSE during execution.	24.9 m toward the front to 24.9 m toward the rear (0.1 m step)	1.0 m toward the front
	QUALITY	This sets the cutting quality. Ordinarily this is left set to NORMAL]. When rapid cutting is desired, such as when cutting a large material, set this to [HI-SPEED]. When load is large, or if the material is not cut smoothly, or when small text is to be cut attractively, set this to [HEAVY].	NORMAL / Hi-SPEED / HEAVY	NORMAL
	EXTEND (only GX-640)	This is a feature to extend the cutting area to the outer side of the pinch rollers. However, the cutting quality in the extended area is not covered under guarantee. Depending on the conditions where the material is loaded, this may also result in cutting performed outside the material or material jams.	0.0 to 25.4 mm (01. mm step)	0.0

Menu		Function	Range	Default
CROPMARK		This is used when creating stickers or the like by cutting material on which alignment marks (crop marks) have been printed around figures. When using the included program, select either [SENSOR MODE] or [TOOL MODE]. For more information, refer to the electronic-format manual ("Printing and Cutting Guide" (for Windows) or "Macintosh Cutting Guide" (for Macintosh).) When using a program other than the included one, select [MANUAL]. For information on how to perform this operation, refer to the page 64 "The Crop Mark Feature."	SENSOR MODE / TOOL MODE ? MANUAL	SENSOR MODE
I/O		This makes the setting for the type of interface used for connection to the computer. This is normally set to [AUTO]. This machine cannot use two ports concurrently. When set to [AUTO], the first port that receives data after the power is turned on is selected as the usable port. To use the other port, either reset the power or change the interface setting using this menu item. For example, if the first set of data is received by the USB port, then to receive the next set of data using the serial port, it is necessary either to reset the power or to change the setting to [SERIAL]. When using a serial connection, the machine's settings are used for the communication parameters. If the interface is not recognized correctly when set to [AUTO], use the menu to choose the type of interface you're using. When using a USB connection, choose [USB]. When using a serial connection, choose [SERIAL].	AUTO / USB / SERIAL	AUTO
	BAUD	Set the communication speed for a serial connection. It is effective only when connected to the computer using a serial cable.	9600/4800	9600
	DATA	Set the number of data bits for a serial connection. It is effective only when connected to the computer using a serial cable.	1to 8	8
	STOP	Set the number of stop bits for a serial connection. It is effective only when connected to the computer using a serial cable.	1/2	1
	PARITY	Set the type of parity checking for a serial connection. It is effective only when connected to the computer using a serial cable.	NONE / EVEN / ODD	NONE
	HAND	Set the handshaking (flow control) for a serial connection. It is effective only when connected to the computer using a serial cable.	H-WIRE / XONOFF	H-WIRE

Menu		Function	Range	Default
AUTOCUT	SPEED	This sets the [AUTOCUT] (material cutoff) speed. Set this to a suitable speed for the loaded material.	40 to 85 cm/s (1 cm/s step)	50 cm/s
	MARGIN	This sets the amount of margin from the cut edge of the material for the next starting point for cutting after cutting off the material.	5 to 50 mm (5 mm step)	30 mm
	PASSES	This sets the number of times material cutoff is performed (once for [1] or twice for [2]). When working with thicker material or other material that's difficult to cut, set this to [2]. Pressing SHEET CUT once performs material cutoff the number of times set here.	1/2	1
	COMMAND	This selects whether the material-cutoff command is enabled or disabled. When set to [ENABLE], material cutoff is performed automatically when a material-cutoff command is sent from the computer. Pressing SHEET CUT performs material cutoff regardless of whether the setting is [ENABLE] or [DISABLE].	DISABLE / ENABLE	DISABLE
SETTING COMMAND	VS COMD	To perform cutting at the speed determined by a VS command (tool speed setting command) sent from the computer, set this to [ENABLE]. When set to [DISABLE], cutting is performed using the values for [**cm/s] at the cutting conditions screen and [UPSPEED].	DISABLE / ENABLE	DISABLE
	!FS CMD	To perform cutting at the blade force determined by an FS command (tool force setting command) sent from the computer, set this to [ENABLE]. When set to [DISABLE], cutting is performed using the values for [**gf] at the cutting conditions screen.	DISABLE / ENABLE	DISABLE
	SP CMD	This is normally set to [DISABLE] when performing a cutting. When a tool-selection instruction (SP instruction) is sent from the computer while this is set to [DISABLE], the SP instruction is ignored and operation continues without pause. When set to [ENABLE], SP exchange instructions are accepted and operation pauses. If tool change is needed, change the tool, then press ENTER .	DISABLE / ENABLE	DISABLE

Menu		Function	Range	Default
OTHERS	SMOOTING	If you want the curves of circles and arcs to be cut smoothly, set this to [ENABLE]. When on, however, small text or intricate designs may also be cut with rounded corners. If this happens, change the setting to [DISABLE] and perform cutting again.	ON / OFF	ON
	UNIT	Select the unit of measurement for numerical values shown on the display. However, values are shown in metrics for the following menus even when inch is selected.	mm / inch	mm
	FACTORY DEFAULT	This returns the settings values of the menu items to their factory-default values.	PRESET	–
	SELF TEST	This adjusts the respective distances of the X axis. Compare the actual measurements of the cutting results with the data sent from the computer to calculate and set the distance adjustment value.	–	–
	CONTRAST	This changes the contrast of the display.	5 to 1	5
	TEST PATTERN	This changes the cutting-test pattern carried out when you press TEST . This performs an ordinary cutting test with [TYPE 1]. For thin materials or cases where graphics are too small to obtain good cutting results with [TYPE 1], make the setting for [TYPE 2]. 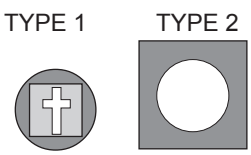	TYPE 1 / TYPE 2	TYPE 1
	OVER CUT	This cuts an excess margin of 1 mm (0.04 in.) from the first and last line segments. This selection is normally set to [DISABLE], and is set to [ENABLE] when cutting especially attractive corners is desired. When cutting small text or intricate graphics, however, this should be set to [DISABLE] to avoid cutting the text or graphics portion of material.	DISABLE / ENABLE	DISABLE
	CALIB	This adjusts the respective distances of the X axis and Y axis. Compare the actual measurements of the cutting results with the data sent from the computer to calculate and set the distance adjustment value.	-2.00 to 2.00 % (0.01 % step)	0.00 %
	AUTO PREFEED (only GX-640)	With this feature set at [ON], the cutting is performed after the material is automatically fed out by 1 m when the cutting data is transmitted from the computer. (If the next transfer point is over 1 m back, the material may be fed out by over 1 m, depending on the data.) When feeding of the material is performed with the [AREA] feature in advance, the automatic feeding is not performed up to the length where the material is fed out then even if [PREFEED] is set at [ON].	OFF ?ON	OFF
	FAN POWER (only GX-640)	This is a useful feature when the media is hard and floating above the platen, or when the media is thin and sticking to the platen. Set a greater value when the material is prone to float, while set a smaller value when it is prone to stick.	-5 to -1 / NORMAL / +1 to +5	NORMAL

Menu	Function	Range	Default
REPLOT	[START] Performs cutting using the data in the replot memory. [CLEAR] Deletes the data in the replot memory.	–	–
MEMORY	This stores the cutting conditions to match the blade and material in use. You can set the following five types of parameters: [SPEED], [OFFSET], [FORCE], [UPSPEED] and [QUALITY]. These settings can be stored in memory as eight patterns (numbered USER1 through 8).	USER 1 to 8	–

Locations of the Power Rating and Serial Number Labels

Serial Number
This is required when you seek maintenance, servicing, or support. Never peel off the label or let it get dirty.

Power Rating
Use an electrical outlet that meets the requirements for voltage, frequency, and amperage given here.

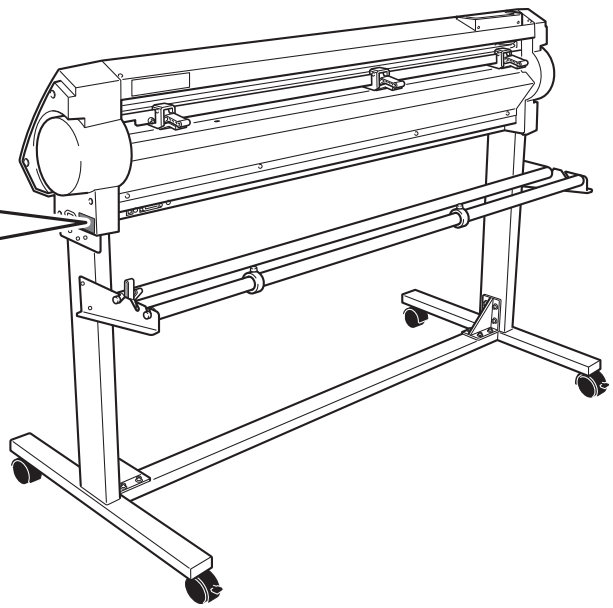

Interface Specifications

Serial

Standard	RS-232C specifications
Transmission method	Asynchronous, duplex data transmission
Transmission speed	4800, 9600(Selected using panel keys)
Parity check	Odd, Even, or None (Selected using panel keys)
Data bits	7 or 8 bits (Selected using panel keys)
Stop bits	1 or 2 bits (Selected using panel keys)
Handshake	Hardwire (power on) or XON/XOFF (Selected using panel keys.)

USB

Standard	Universal Serial Bus Specification Revision 1.1 Universal Serial Bus Device Class Definition for Printing Device Version 1.1
Transmission speed	12 Mbps (Full Speed Device)
Data format	NRZI
Compatible connector	Series B
Permissible Cable length	3 m

Serial connector

Signal number	Terminal number		Signal number	Pin Connection
NC	25	13	NC	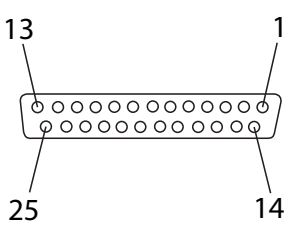
NC	24	12	NC	
NC	23	11	NC	
NC	22	10	NC	
NC	21	9	NC	
DTR	20	8	NC	
NC	19	7	SG	
NC	18	6	DSR	
NC	17	5	CTS	
NC	16	4	RTS	
NC	15	3	RXD	
NC	14	2	TXD	
		1	FG	

USB connector

Pin number	Signal	Remark
1	VCC	Cable power
2	- Data	
3	+ Data	
4	GND	Cable ground

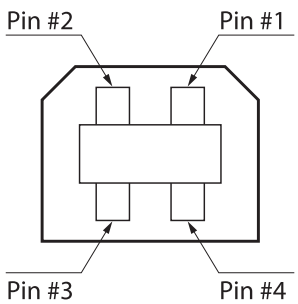

XY-RS-34 serial cable connection

Note: When making a serial connection using a cable other than a XY-RS-34 cable from Roland DG Corp., use a serial cable wired as shown in the figure below.

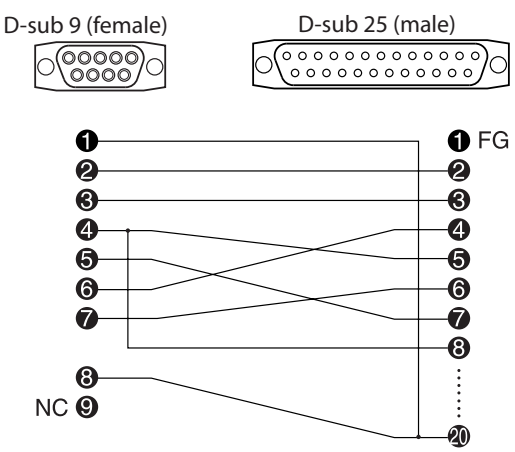

Specifications

	GX-640	GX-500	GX-400	GX-300
Mechanism	Media-movement method			
Driving method	Digital control servo motor			
Maximum cutting area	Width: 1575 mm (62 in.) Length: 24998 mm (984-1/8 in.) The width can be expanded by 1626mm (64 in.).	Width: 1195 mm (47 in.) Length: 24998 mm (984-1/8 in.)	Width: 1000 mm (39 in.) Length: 24998 mm (984-1/8 in.)	Width: 737 mm (29 in.) Length: 24998 mm (984-1/8 in.)
Acceptable media widths	Min. 130 mm (5-1/16 in.) Max. 1842 mm (72-1/2)	Min. 90 mm (3-1/2 in.) Max. 1372 mm (54 in.)	Min. 90 mm (3-1/2 in.) Max. 1178 mm (46 in.)	Min. 50 mm (2 in.) / Max. 915 mm (36 in.) (50 to 540 mm (2 in. to 21 in.), 582 to 915 mm (23 in. to 36 in.))
Width of material that can be cut off	0 mm to 1778 mm (0 in. to 70 in.)	0 mm to 1270 mm (0 in. to 50 in.)	0 mm to 1067 mm (0 in. to 42 in.)	0 mm to 812 mm (0 to 32 in.)
Tools	Special blade for CAMM-1 series			
Maximum cutting speed	During cutting: 850 mm/sec. (in all directions) During tool-up.1202 mm/sec. (in 45° direction)			
Cutting speed	10 mm/sec. to 850 mm/sec. (in increments of 10 mm/sec.)			
Blade force	20 gf to 350 gf			
Mechanical resolution	0.0035 mm/step (0.000137 in. / step)	0.0125 mm/step (0.000492 in. /step)		
Software resolution	0.025 mm/step (0.000984 in. / step)			
Distance accuracy(*1)	Error of less than ±0.2 % of distance traveled, or 0.1 mm (0.00394 in.), whichever is greater			
Repetition accuracy (*1)(*2)(*3)	0.1 mm or less			
Interface	Serial (RS-232C-compatible), USB (Rev1.1)			
Replot memory	2MB (buffer size: 8MB)			
Instruction system	Dedicated system (CAMM-GLIII-compatable)			
Power supply	AC100V to 240V±10% 50/60Hz 1.2A			AC100V to 240V±10% 50/60Hz 1.1A
Power consumption	Approx. 100W			Approx. 95W
Acoustic noise level	Cutting mode: 62dB (A) or less Standby mode: 40dB (A) or less			
Dimensions (Main unit)	2115 mm (W) × 264 mm (D) × 398 mm (H) (83-1/4 in. (W) x 10-3/8 in. (D) x 15-11/16 in. (H))	1602 mm (W) × 264 mm (D) × 398 mm (H) (63-1/16 in. (W) x 10-3/8 in. (D) x 15-11/16 in. (H))	1407 mm (W) × 264 mm (D) × 398 mm (H) (55-3/8 in. (W) x 10-3/8 in. (D) x 15-11/16 in. (H))	1144 mm (W) × 264 mm (D) × 398 mm (H) (45-1/16 in. (W) x 10-3/8 in. (D) x 15-11/16 in. (H))
Dimensions (With stand)	2115 mm (w) × 727 mm (D) × 1113 mm (H) (83-1/4 in. (W) x 28-5/8 in. (D) x 43-13/16 in. (H))	1602 mm (W) × 727 mm (D) × 1113 mm (H) (63-1/16 in. (W) x 28-5/8 in. (D) x 43-13/16 in. (H))	1407 mm (W) × 727 mm (D) × 1113 mm (H) (55-3/8 in. (W) x 28-5/8 in. (D) x 43-13/16 in. (H))	1144 mm (W) × 727 mm (D) × 1113 mm (H) (45-1/16 in. (W) x 28-5/8 in. (D) x 43-13/16 in. (H))
Weight (Main unit)	41 kg (90.4 lb.)	35 kg (77.2 lb.)	31 kg (68.3 lb.)	26 kg (57.3 lb.)
Weight (With stand)	64 kg (141.1)	55 kg (121.2 lb.)	51 kg (112.4 lb.)	44 kg (97 lb.)
Operating temperature	5 to 40 °C (41 to 104°F)			
Operating humidity	35% to 80% (non-condensing)			
Accessories	Power cord, blade holder (XD-CH2), pin, blade, alignment tool, replacement blade for separating knife, USB cable, Roland software package CD-ROM, setup guide, user's manual, etc.			

*1
According to material and cutting conditions as specified by Roland DG Corp. (refer to the figure below).
*2
Excluding stretching/contraction of the material
*3
Range for assured repetition accuracy
- For materials with a width exceeding 610 mm (24 in.): Length 4,000 mm (157-7/16 in.)
- For materials with a width of 610 mm (24 in.) or less : Length 8,000 mm (314-15/16 in.)

(*1) The following conditions must be satisfied:
- Material type: 3M Scotchcal Mastercut Film
- Special stand (a roll material must be set at the rear and on the sheet hanger)
- Side margins: 25 mm (1 in.) or more for both the left and right margins
- Front margin: 30 mm (1-3/16 in.) or more

(After loading the material, using the display menu to select [F-EDGE] as the material type automatically sets a front margin of 30 mm (1-3/16 in.).)
- Use of the display menu's [AREA] function to perform feed of the material length plus 0.2 m and set the material correctly
- Cutting the following data one time

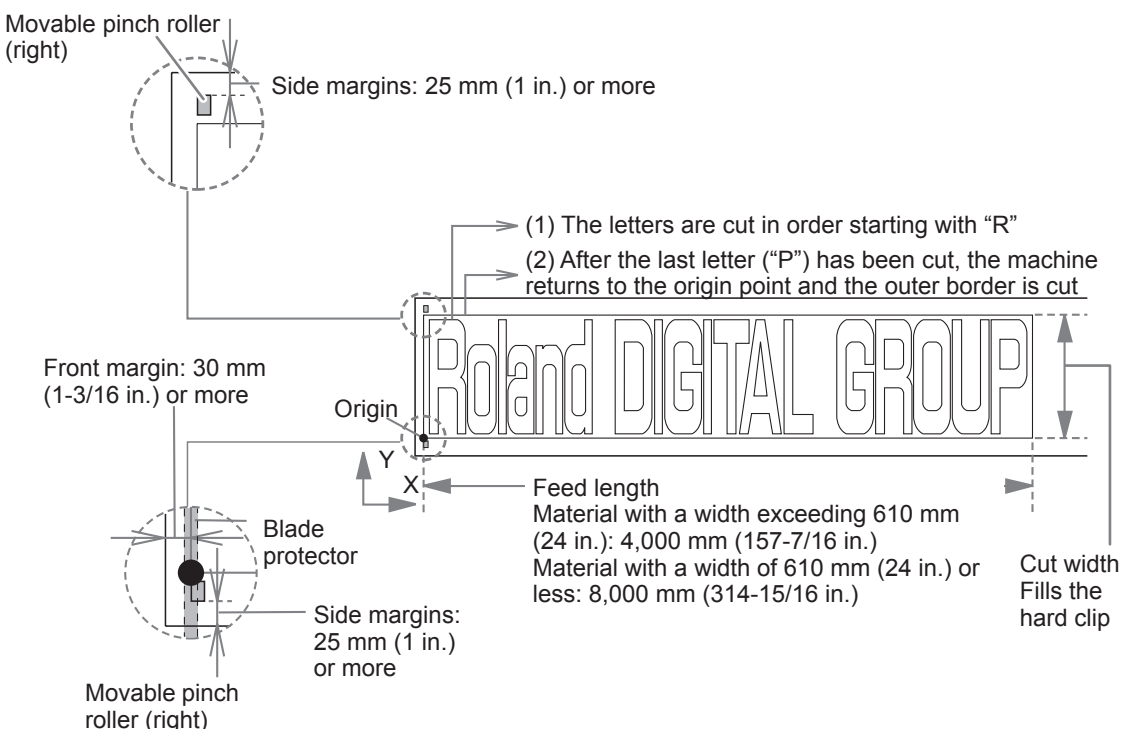

The origin is rotated 90 degrees ([ROTATE] on the display menu is set to [90deg]).

For China

产品中有毒有害物质或元素的名称及含量

部件名称	有毒有害物质或元素					
	铅(Pb)	汞(Hg)	镉(Cd)	六价铬(Cr(VI))	多溴联苯(PBB)	多溴二苯醚(PBDE)
印刷电路板	×	○	×	○	○	○
头部	×	○	○	○	○	○
壳体、底架	×	○	○	○	○	○
电源	×	○	×	○	○	○
其他（电缆、附件等）	×	○	○	○	○	○

○：表示该有毒有害物质在该部件所有均质材料中的含量均在 GB/T26572-2011 标准规定的限量要求以下。

×：表示该有毒有害物质至少在该部件的某一均质材料中的含量超出 GB/T26572-2011 标准规定的限量要求。

环保使用期限

此标志适用于在中国国内销售的电子信息产品，表示环保使用期限的年数。
所谓环保使用期限是指在自制造日起的规定期限内，产品中所含的有害物质不致引起环境污染，不会对人身、财产造成严重的不良影响。
环保使用期限仅在遵照产品使用说明书，正确使用产品的条件下才有效。
不当的使用，将会导致有害物质泄漏的危险。

For EU Countries

This product must be disposed of separately at your local waste recycling center. Do not dispose of in household waste bin.

Bitte führen Sie dieses Produkt separat Ihrer örtlichen Entsorgungsstelle zu. Bitte nicht mit dem normalen Hausmüll entsorgen.

Ne jetez pas le produit avec vos ordures ménagères. Portez-le dans un centre recyclage des déchets.

Questo prodotto deve essere smaltito negli appositi contenitori per la raccolta differenziata, non buttare nel cestino dei rifiuti casalinghi.

Este producto debe devolverse al centro de reciclaje más cercano a su domicilio para su correcta eliminación. No lo tire a la basura.

Deite fora separadamente este produto no seu centro de reciclagem local. Não o deite fora no seu caixote do lixo.

Lever dit product in bij een lokaal afvalverzamelpunt. NIET met normaal huishoudelijk afval afvoeren.

Dette Produkt skal smides særskilt væk på den lokale affalds- og genbrugsstation. Må ikke smides ud sammen med almindeligt husholdningsaffald.

Tätä tuotetta ei saa hävittää normaalien talousjätteiden mukana, vaan se on toimitettava ongelmajätteiden keräilypisteeseen hävitettäväksi.

Produkten måste kasseras separat på din lokala återvinningscentral. Släng inte produkten tillsammans med hushållssoporna.

Μην πετάξετε το αντικείμενο αυτό στο καλάθι των απορριμμάτων. Αφαιρέστε τις μπαταρίες και προσκομίστε το στο τοπικό κέντρο ανακύκλωσης.

RolandDG Corp. has licensed the MMP technology from the TPL Group.

Roland

1000009713

R2-120604