Roland

VersaUV

LEC2-300

Setup Guide

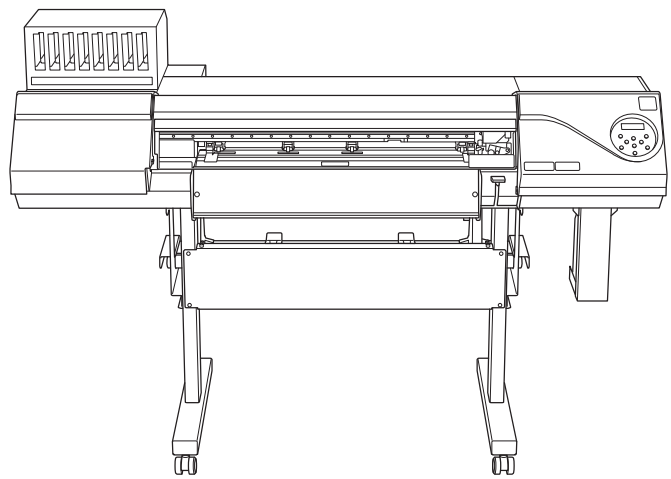

- Thank you very much for purchasing this product.
- To ensure correct and safe usage with a full understanding of this product's performance, please be sure to read through this manual completely and store it in a safe location.
- Unauthorized copying or transferal, in whole or in part, of this manual is prohibited.
- The specifications of this product and the contents of this operation manual are subject to change without notice.
- This manual and the product have been prepared and tested as much as possible. If you find any misprints or errors, please inform Roland DG Corporation.
- Roland DG Corporation assumes no responsibility for any direct or indirect loss or damage that may occur through use of this product, regardless of any failure to perform on the part of this product.
- Roland DG Corporation assumes no responsibility for any direct or indirect loss or damage that may occur with respect to any article made using this product.

Roland DG Corporation

R2-191115T

1000022284

For the USA

FEDERAL COMMUNICATIONS COMMISSION RADIO FREQUENCY INTERFERENCE STATEMENT

Responsible Party : Roland DGA Corporation

Address : 15363 Barranca Parkway Irvine, CA 92618 U.S.A.

Telephone : 949-727-2100

Type of Equipment :Printer

Model Name :LEC2-300

NOTE:

This equipment has been tested and found to comply with the limits for a Class A digital device, pursuant to part 15 of the FCC Rules. These limits are designed to provide reasonable protection against harmful interference when the equipment is operated in a commercial environment. This equipment generates, uses, and can radiate radio frequency energy and, if not installed and used in accordance with the instruction manual, may cause harmful interference to radio communications. Operation of this equipment in a residential area is likely to cause harmful interference in which case the user will be required to correct the interference at his own expense.

This device complies with part 15 of the FCC Rules. Operation is subject to the following two conditions: (1) This device may not cause harmful interference, and (2) this device must accept any interference received, including interference that may cause undesired operation.

FCC CAUTION

Changes or modifications not expressly approved by the party responsible for compliance could void the user's authority to operate the equipment.

Use only I/O cables that have been designed and manufactured specifically for this device.

For Canada

CAN ICES-3 (A)/NMB-3(A)

For California

⚠ WARNING: This product can expose you to chemicals including lead,which is known to the State of California to cause cancer and birth defects or other reproductive harm.

For more information go to www.P65Warnings.ca.gov.

For EU Countries

WARNING

Operation of this equipment in a residential environment could cause radio interference.

For EU Countries

CE

Manufacturer:

ROLAND DG CORPORATION

1-6-4 Shinmiyakoda, Kita-ku, Hamamatsu-shi, Shizuoka-ken, 431-2103 JAPAN

The importer in the EU:

Roland DG Europe Holdings B.V.

Prof. J.H. Bavincklaan 2, 1183 AT, Amstelveen, The Netherlands

NOTICE

Grounding Instructions

- In the event of a malfunction or breakdown, grounding provides a path of least resistance for electric current to reduce the risk of electric shock. This tool is equipped with an electric cord having an equipment-grounding conductor and a grounding plug. The plug must be plugged into a matching outlet that is properly installed and grounded in accordance with all local codes and ordinances.
- Do not modify the plug provided - if it will not fit the outlet, have the proper outlet installed by a qualified electrician.
- Improper connection of the equipment-grounding conductor can result in a risk of electric shock. The conductor with insulation having an outer surface that is green with or without yellow stripes is the equipment-grounding conductor. If repair or replacement of the electric cord or plug is necessary, do not connect the equipment-grounding conductor to a live terminal.
- Check with a qualified electrician or service personnel if the grounding instructions are not completely understood, or if in doubt as to whether the tool is properly grounded.
- Use only 3-wire extension cords that have 3-prong grounding plugs and 3-pole receptacles that accept the tool's plug.
- Repair or replace damaged or worn cord immediately.

Contents

Contents 1
To Ensure Safe Use 3
Pour utiliser en toute sécurité 10

1. Introduction 17

1. About the User's Manuals for This Machine 18
2. Checking Included Items 19

2. Installation 21

1. Checks before Installation 22
    - About Placement and Installation Work 22
    - Deciding On an Installation Site 22
    - Temperature and Humidity 23
    - Installation Space 23
    - Air Ventilation 23
2. Assembly and Ink Filling 24
    - Checks before Operations 24
    - Step 1: Assemble the Stand and Mount the Machine on the Stand 25
    - Step 2: Attach the Media Holders 28
    - Step 3: Install the Drain Bottle 30
    - Step 4: Remove and Store the Retainers 33
    - Step 5: Attach the Label 34
    - Step 6: Connect the Power Cord and the Cable 34
    - Step 7: Set the Language and the Units 36
    - Step 8: Fill the Machine with Ink 37
3. Installing the Cutting Tool 41
    - Step 1: Assemble the Cutting Tool 41
    - Step 2: Install the Cutting Tool 42
4. Network Settings 44
    - Step 1: Make the Network Settings for the Computer 44
    - Step 2: Make the Network Settings on the Printer 47
    - Step 3: Make the Port Settings for the Software RIP 49
5. Installation of Ventilating Equipment 50
    - Ventilating Equipment 50
    - Installing the Ventilating Equipment 50

3. Appendix 53

Location of the Power Rating and Serial Number Label 54
Specifications 55

Company names and product names are trademarks or registered trademarks of their respective holders.

Copyright © 2019 Roland DG Corporation

http://www.rolanddg.com/

For China

产品中有毒有害物质或元素的名称及含量

部件名称	有毒有害物质或元素					
	铅(Pb)	汞(Hg)	镉(Cd)	六价铬(Cr(VI))	多溴联苯(PBB)	多溴二苯醚(PBDE)
印刷电路板	×	○	×	○	○	○
头部	×	○	○	○	○	○
壳体、底架	×	○	○	○	○	○
电源	×	○	×	○	○	○
其他（电缆、附件等）	×	○	○	○	○	○

○：表示该有毒有害物质在该部件所有均质材料中的含量均在 GB/T26572-2011 标准规定的限量要求以下。
×：表示该有毒有害物质至少在该部件的某一均质材料中的含量超出 GB/T26572-2011 标准规定的限量要求。

环保使用期限

此标志适用于在中国国内销售的电子信息产品，表示环保使用期限的年数。
所谓环保使用期限是指在自制造日起的规定期限内，产品中所含的有害物质不致引起环境污染，不会对人身、财产造成严重的不良影响。
环保使用期限仅在遵照产品使用说明书，正确使用产品的条件下才有效。
不当的使用，将会导致有害物质泄漏的危险。

For EU countries

This product must be disposed of separately at your local waste recycling center. Do not dispose of in household waste bin.

Lever dit product in bij een lokaal afvalverzamelpunt. NIET met normaal huishoudelijk afval afvoeren.

Bitte führen Sie dieses Produkt separat Ihrer örtlichen Entsorgungsstelle zu. Bitte nicht mit dem normalen Hausmüll entsorgen.

Dette Produkt skal smides særskilt væk på den lokale affalds- og genbrugsstation. Må ikke smides ud sammen med almindeligt husholdningsaffald.

Ne jetez pas le produit avec vos ordures ménagères. Portez-le dans un centre recyclage des déchets.

Tätä tuotetta ei saa hävittää normaalien talousjätteiden mukana, vaan se on toimitettava ongelmajätteiden keräilypisteeseen hävitettäväksi.

Questo prodotto deve essere smaltito negli appositi contenitori per la raccolta differenziata, non buttare nel cestino dei rifiuti casalinghi.

Produkten måste kasseras separat på din lokala återvinningscentral. Släng inte produkten tillsammans med hushållssoporna.

Este producto debe devolverse al centro de reciclaje más cercano a su domicilio para su correcta eliminación. No lo tire a la basura.

Μην πετάξετε το αντικείμενο αυτό στο καλάθι των απορριμμάτων. Αφαιρέστε τις μπαταρίες και προσκομίστε το στο τοπικό κέντρο ανακύκλωσης.

Deite fora separadamente este produto no seu centro de reciclagem local. Não o deite fora no seu caixote do lixo.

To Ensure Safe Use

Improper handling or operation of this machine may result in injury or damage to property. Points that must be observed to prevent such injury or damage are described as follows.

About ⚠ WARNING and ⚠ CAUTION Notices

⚠ **WARNING**	Used for instructions intended to alert the user to the risk of death or severe injury should the unit be used improperly.
⚠ **CAUTION**	Used for instructions intended to alert the user to the risk of injury or material damage should the unit be used improperly. *Material damage refers to damage or other adverse effects caused with respect to the home and all its furnishings as well as to domestic animals or pets.

About the Symbols

	The △ symbol alerts the user to important instructions or warnings. The specific meaning of the symbol is determined by the design contained within the △ symbol. The symbol at left means "danger of electrical shock."
	The ⃠ symbol alerts the user to items that must never be carried out (are forbidden). The specific meaning of the symbol is determined by the design contained within the ⃠ symbol. The symbol at left means the unit must never be disassembled.
	The ● symbol alerts the user to things that must be carried out. The specific meaning of the symbol is determined by the design contained within the ● symbol. The symbol at left means the power-cord plug must be unplugged from the outlet.

⚠ This is a heavy machine.

⚠ WARNING

Unloading and emplacement are operations that must be performed by 6 persons or more.
Tasks that require undue effort when performed by a small number of persons may result in physical injury. Also, if dropped, such items may cause injury.

Install the machine in a location that is level, stable, and able to bear the weight of the machine.
The total weight of the machine may reach 150 kg (330.7 lb.) or more. Installation in an unsuitable location may cause a major accident, including tip over, fall, or collapse.

⚠ WARNING

Be sure to lock the stand's casters.
If the machine should begin to topple, a major accident may result, including crushing of the parts of your body.

When storing roll media, implement adequate safety measures to ensure that the stored media will not roll, fall, or topple over.
Danger exists of becoming pinned under the media and suffering serious injury.

Handling roll media is an operation that must be performed by two persons or more, and care must be taken to prevent falls.
Attempting manual lifting of heavy media that taxes your strength may cause physical injury. Also, if dropped, such items may cause injury.

⚠ Incorrect operation may cause injury

⚠ WARNING

Be sure to follow the operation procedures described in the user's manual. Never allow anyone unfamiliar with the usage or handling of the machine to touch it.
Incorrect usage or handling may lead to an accident.

Keep children away from the machine.
The machine includes areas and components that pose a hazard to children and may result in injury, blindness, choking, or other serious accident.

Never operate the machine while tired or after ingesting alcohol or any medication.
Operation requires unimpaired judgment. Operating with impaired judgment may result in an accident.

Always unplug the power cord when attaching or removing parts and optional parts and when performing cleaning or maintenance that does not require the machine to be connected to a power source.
Attempting such operations while the machine is connected to a power source may result in injury or electrical shock.

Never attempt to disassemble, repair, or modify the machine.
Doing so may result in fire, electrical shock, or injury. Entrust repairs to a trained service technician.

⚠ CAUTION

Exercise caution to avoid being pinched or becoming caught.
Inadvertent contact with certain areas may cause the hand or fingers to be pinched or become caught. Use care when performing operations.

Never attempt operation while wearing a necktie, necklace, loose clothing, or gloves. Bind long hair securely.
Such items may become caught in the machine, resulting in injury.

Conduct operations in a clean, brightly lit location.
Working in a location that is dark or cluttered may lead to an accident, such as becoming caught in the machine as the result of an inadvertent stumble.

Never climb or lean on the machine.
The machine is not made to support a person. Climbing or leaning on the machine may dislodge components and cause a slip or fall, resulting in injury.

Caution: cutting tool.
This machine has a cutting tool. To avoid injury, handle the tool with care.

⚠ Danger of electrical short, electrical shock, or fire

⚠ WARNING

Connect to an electrical outlet that complies with this machine's ratings (for voltage, frequency, and current).
Incorrect voltage or insufficient current may cause fire or electrical shock.

Never use outside or in any location where exposure to water or high humidity may occur. Do not touch the power cord, plug, or electrical outlet with wet hands.
Doing so may result in fire or electrical shock.

Never allow any foreign object to get inside. Never expose the machine to liquid spills.
Inserting objects such as coins or matches or allowing beverages to be spilled into the ventilation ports may result in fire or electrical shock. If anything gets inside, immediately disconnect the power cord and contact your authorized Roland DG Corporation dealer.

Never place any flammable object nearby. Never use a combustible aerosol spray nearby. Never use in any location where gases can accumulate.
Combustion or explosion could occur.

Handle the power cord, plug, and electrical outlet correctly and with care. Never use any article that is damaged.
Using a damaged article may result in fire or electrical shock.

When using an extension cord or power strip, use one that adequately satisfies the machine's ratings (for voltage, frequency, and current).
Use of multiple electrical loads on a single electrical outlet or of a lengthy extension cord may cause fire.

Connect to ground.
This can prevent fire or electrical shock due to current leakage in the event of malfunction.

⚠ WARNING

Position so that the power plug is within immediate reach at all times.
This is to enable quick disconnection of the power plug in the event of an emergency. Install the machine next to an electrical outlet. Also, provide enough empty space to allow immediate access to the electrical outlet.

If sparks, smoke, burning odors, unusual sounds, or abnormal operation occur, immediately unplug the power cord. Never use if any component is damaged.
Continuing to use the machine may result in fire, electrical shock, or injury. Contact your authorized Roland DG Corporation dealer.

Do not use the supplied power cord for other products.

Never use the machine for any purpose for which it is not intended, or use the machine in an excessive manner that exceeds its capacity.
Doing so may result in injury or fire.

For accessories (optional and consumable items, power cord, and the like), use only genuine articles compatible with this machine.
Incompatible items may lead to an accident.

⚠ Important notes about the power cord, plug, and electrical outlet

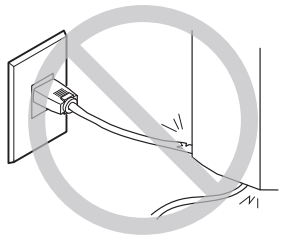

Never place any object on top or subject to damage.

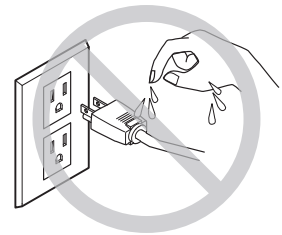

Never allow to get wet.

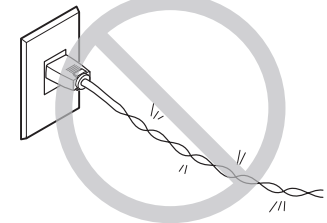

Never bend or twist with excessive force.

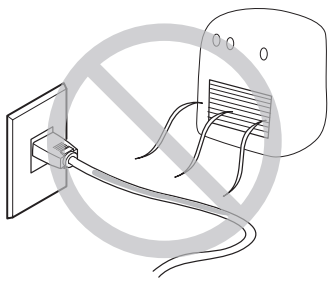

Never make hot.

Never pull with excessive force.

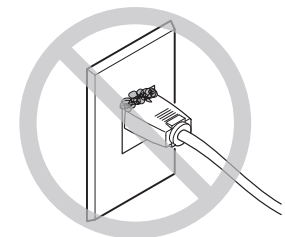

Dust may cause fire.

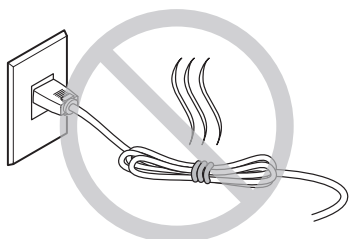

Never bundle, bind, or roll up.

⚠ Ink, cleaning liquid, and discharged fluid are flammable and toxic.

⚠ WARNING

Keep open flame away from the work area.
Ink and discharged fluid are flammable.

Never store ink, cleaning liquid, or discharged fluid in any of the following locations.

- Any location exposed to open flame
- Any location where high temperature may occur
- Near bleach or any other such oxidizing agent or explosive material
- Any location within the reach of children

Fire may be a danger. Accidental ingestion by children may pose a health hazard.

Never place an ink container (such as a cartridge or pouch) in fire.
Ink may flow out, catch fire, and spread fire to other nearby objects.

⚠ WARNING

Never drink or sniff ink, cleaning liquid, or discharged fluid, or allow them to come in contact with the eyes or skin.
Doing so may be hazardous to your health.

⚠ CAUTION

Ensure adequate ventilation for the work area.
Failing to perform ventilation may result in a health hazard or danger of combustion due to ink fumes.

Never allow an ink container (such as a cartridge or pouch) to be subjected to impact, and never attempt to disassemble.
Ink may leak.

⚠ In the event of ingestion or physical distress

- In the event of contact with the eyes, immediately flush with water for at least 15 minutes. If eye irritation continues, seek treatment by a physician.
- In the event of contact with skin, immediately wash with soap. If irritation or inflammation occurs, seek treatment by a physician.
- In the event of ingestion, do not induce vomiting, and immediately seek treatment by a physician. Forcibly inducing vomiting may lead to danger of choking.
- If odor leads to physical distress, move to a well-ventilated location and rest quietly. If dizziness or nausea persists, seek treatment by a physician.

* Refer to the appropriate safety data sheet (SDS) for the chemical substances used in the ink and the safety related to those substances.

⚠ Danger of fire, burns, or toxic gas emissions

⚠ WARNING

Caution: High Temperature
The area around the UV-LED device becomes hot. Exercise caution to avoid burns.

⚠ This machine uses ultraviolet light

⚠ CAUTION

Never look at the blue-white (ultraviolet) light emitted from the print-head area for an extended time.
Looking directly at the ultraviolet light from up close for an extended period may result in eye injury.

⚠ Caution: Ultraviolet Light

This machine is fitted with covers to keep external leakage of ultraviolet light at low levels, but incorrect handling or operation can lead to physical injury due to ultraviolet light. The extent of injury depends on the intensity and wavelength of the ultraviolet light, and the length of time of exposure. Prolonged exposure to strong ultraviolet light of hazardous wavelengths can cause injury to the eyes or skin. Exercise caution.

⚠ Warning Labels

Warning labels are affixed to the machine to make areas of danger immediately clear. The meanings of these labels are indicated below. Be sure to heed their warnings. Also, never remove the labels or allow them to become dirty.

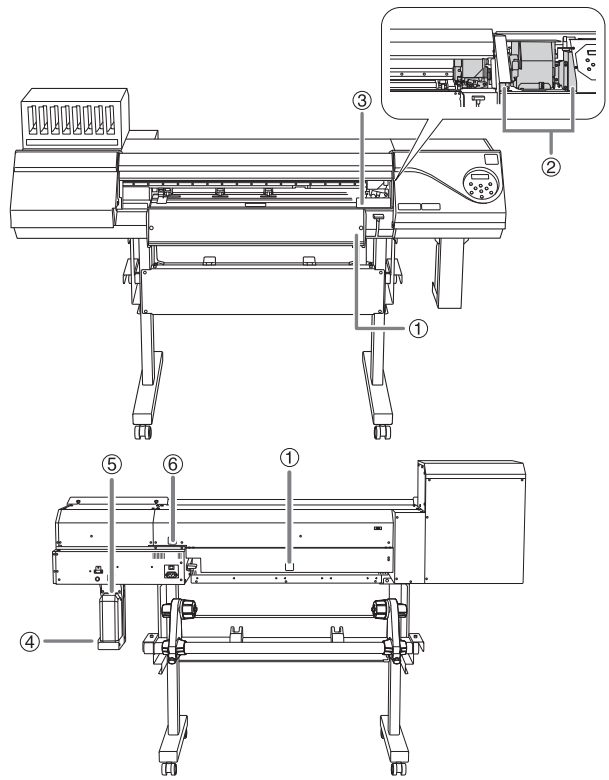

①		**Caution: Ultraviolet Light** When the cover is open, check that the UV lamp is off.
②		**Caution: High Temperature** The UV-LED device becomes hot. Exercise caution to avoid burns.
③		**Caution: Moving Print Heads** The print heads inside the cover move at high speed and pose a hazard. Never insert your hands or fingers into the gap.
④		**Ink, cleaning fluid, and discharged fluid are flammable and toxic.** If these fluids come into contact with the eyes or skin, it may be hazardous to the health. When performing maintenance work, for example when disposing of discharged fluid, wear protective eyewear and protective gloves (refer to the safety data sheet [SDS]).
⑤		**Flammable** Ink and discharged fluid are flammable. Keep away from open flame.
⑥		**Exercise caution when handling heavy objects.** Attempting manual lifting of heavy media that taxes your strength may cause physical injury. Also, if dropped, such items may cause injury.

Pour utiliser en toute sécurité

La manipulation ou l'utilisation inadéquate de cet appareil peuvent causer des blessures ou des dommages matériels. Les précautions à prendre pour prévenir les blessures ou les dommages sont décrites ci-dessous.

À propos des avis ⚠ ATTENTION et ⚠ PRUDENCE

⚠ **ATTENTION**	Utilisé pour avertir l'utilisateur d'un risque de décès ou de blessure grave en cas de mauvaise utilisation de l'appareil.
⚠ **PRUDENCE**	Utilisé pour avertir l'utilisateur d'un risque de blessure ou de dommage matériel en cas de mauvaise utilisation de l'appareil. * Par dommage matériel, il est entendu dommage ou tout autre effet indésirable sur la maison, tous les meubles et même les animaux domestiques.

À propos des symboles

	Le symbole △ attire l'attention de l'utilisateur sur les instructions importantes ou les avertissements. Le sens précis du symbole est déterminé par le dessin à l'intérieur du symbole △. Le symbole à gauche signifie « danger d'électrocution ».
	Le symbole ⃠ avertit l'utilisateur de ce qu'il ne doit pas faire, ce qui est interdit. Le sens précis du symbole est déterminé par le dessin à l'intérieur du symbole ⃠. Le symbole à gauche signifie que l'appareil ne doit jamais être démonté.
	Le symbole ● prévient l'utilisateur sur ce qu'il doit faire. Le sens précis du symbole est déterminé par le dessin à l'intérieur du symbole ●. Le symbole à gauche signifie que le fil électrique doit être débranché de la prise.

⚠ Cet appareil est lourd.

⚠ ATTENTION

Le déchargement et la mise en place doivent être faits par au moins six personnes.
Les tâches qui exigent un effort trop grand si elles sont exécutées par un petit nombre de personnes peuvent être cause de blessures. La chute d'articles très lourds peut aussi causer des blessures.

Installer l'appareil à un endroit de niveau, stable et pouvant prendre en charge le poids l'appareil.
Le poids total de la machine peut atteindre 150 kg (330.7 lb) ou plus. Installer l'appareil à un endroit inapproprié peut provoquer un accident grave comme le renversement, la chute ou l'effondrement.

⚠ ATTENTION

S'assurer de verrouiller les roulettes de la base.
Si éventuellement l'appareil commencerait à basculer, il pourrait provoquer un accident important, notamment écraser des parties de votre corps.

Lors de l'entreposage du support en rouleau, prendre les mesures de sécurité adéquates pour s'assurer que le rouleau ne roulera pas, ne tombera et ne basculera pas.
Il y a un danger de rester coincer sous le support et de subir des graves blessures.

La manutention du support en rouleau doit être faite par deux personnes ou plus et il faut prendre des précautions pour éviter les chutes.
Tenter de soulever manuellement des objets trop lourds peut causer des blessures. La chute d'articles très lourds peut aussi causer des blessures.

⚠ Une utilisation incorrecte peut causer des blessures

⚠ ATTENTION

S'assurer de suivre les procédures d'utilisation décrites dans le manuel utilisateur. Ne jamais permettre à quiconque ne connaissant pas le fonctionnement ou la manutention de l'appareil de le toucher.
L'utilisation ou la manutention incorrectes peuvent causer un accident.

Garder les enfants loin de l'appareil.
L'appareil comporte des zones et des composants qui présentent un danger pour les enfants et qui pourraient causer des blessures, la cécité, la suffocation ou d'autres accidents graves.

Ne jamais faire fonctionner l'appareil après avoir consommé de l'alcool ou des médicaments, ou dans un état de fatigue.
L'utilisation de l'appareil exige un jugement sans faille. L'utilisation avec les facultés affaiblies pourrait entraîner un accident.

Toujours débrancher le câble d'alimentation lors de la fixation ou du retrait de pièces et de pièces en option et du nettoyage ou des travaux d'entretien qui n'exigent pas un branchement de l'appareil à une source d'alimentation.
Tenter ces opérations pendant que l'appareil est branché à une source d'alimentation peut causer des blessures ou un choc électrique.

Ne jamais tenter de démonter, de réparer ou de modifier l'appareil.
Le non-respect de cette consigne risque de provoquer un incendie, un choc électrique ou des blessures. Confier les réparations à un technicien ayant la formation requise.

⚠ PRUDENCE

Faire preuve de prudence pour éviter l'écrasement ou le coincement.
La main ou les doigts peuvent être écrasés ou coincés s'ils entrent en contact avec certaines surfaces par inadvertance. Faire preuve de prudence pendant l'utilisation de l'appareil.

Ne jamais faire fonctionner l'appareil si on porte une cravate, un collier ou des vêtements amples. Bien attacher les cheveux longs.
Ces vêtements ou ces objets peuvent être coincés dans l'appareil, ce qui causerait des blessures.

Utiliser l'appareil dans un endroit propre et bien éclairé.
Travailler dans un endroit sombre ou encombré peut causer un accident; l'utilisateur risque, par exemple, de trébucher malencontreusement et d'être coincé par une partie de l'appareil.

Ne jamais grimper ni s'appuyer sur la machine.
La machine n'est pas conçue pour supporter le poids d'une personne. Grimper ou s'appuyer sur la machine peut déplacer des éléments et causer un faux pas ou une chute, ce qui causerait des blessures.

Prudence : outil de coupe.
Cet appareil contient un outil interne. Pour éviter les blessures, manipuler l'outil avec soin.

⚠ Risque de décharge ou de choc électrique, d'électrocution ou d'incendie

⚠ ATTENTION

Brancher à une prise électrique conforme aux caractéristiques de cet appareil (tension, fréquence et courant).
Une tension incorrecte ou un courant insuffisant peuvent causer un incendie ou un choc électrique.

Ne jamais utiliser à l'extérieur ni à un endroit où l'appareil risque d'être exposé à de l'eau ou à une humidité élevée. Ne pas toucher le câble d'alimentation, la fiche ou la prise électrique avec des mains mouillées.
Le non-respect de cette consigne risque de provoquer un incendie ou un choc électrique.

Ne jamais insérer d'objet étranger dans l'appareil. Ne jamais exposer l'appareil aux déversements de liquides.
L'insertion d'objets comme des pièces de monnaie ou des allumettes ou le déversement de liquides dans les orifices de ventilation peuvent causer un incendie ou un choc électrique. Si un objet ou du liquide s'infiltre dans l'appareil, débrancher immédiatement le câble d'alimentation et communiquer avec le représentant Roland DG Corporation autorisé.

Ne jamais placer d'objet inflammable à proximité de l'appareil. Ne jamais utiliser de produit inflammable en aérosol à proximité de l'appareil. Ne jamais utiliser l'appareil dans un endroit où des gaz peuvent s'accumuler.
Une combustion ou une explosion pourraient se produire.

Manipuler le câble d'alimentation, la fiche et la prise électrique correctement et avec soin. Ne jamais utiliser un article endommagé,
car cela pourrait causer un incendie ou un choc électrique.

Si une rallonge ou une bande d'alimentation électrique sont utilisées,s'assurer qu'elles correspondent aux caractéristiques de l'appareil (tension,fréquence et courant).
L'utilisation de plusieurs charges électriques sur une prise unique ou une longue rallonge peut causer un incendie.

Mise à la terre.
La mise à la terre peut prévenir un incendie ou un choc électrique dus à une fuite de courant en cas de défaillance.

⚠ ATTENTION

Placer l'appareil de façon à ce que la fiche soit facile d'accès en tout temps.
Ainsi, l'appareil pourra être débranché rapidement en cas d'urgence Installer l'appareil près d'une prise électrique. En outre, prévoir suffisamment d'espace pour que la prise électrique soit facile d'accès.

S'il se produit des étincelles, de la fumée, une odeur de brûlé, des bruits inhabituels ou un fonctionnement anormal, débrancher immédiatement le câble d'alimentation. Ne jamais utiliser si un composant est endommagé.
Continuer à utiliser l'appareil peut causer un incendie, un choc électrique ou des blessures. Communiquer avec le représentant Roland DG Corporation autorisé.

Ne pas utiliser le cordon électrique fourni avec d'autres produits.

Ne jamais utiliser l'appareil à des fins autres que celles pour lesquelles il est conçu. Ne jamais l'utiliser de manière abusive ou excessive.
Le non-respect de cette consigne peut causer des blessures ou un incendie.

Utiliser uniquement des accessoires d'origine (accessoires en option, articles consommables, câble d'alimentation et autres articles semblables), compatibles avec l'appareil.
Les articles incompatibles risquent de causer des accidents.

⚠ Remarques importantes à propos du câble d'alimentation, de la fiche et de la prise électrique.

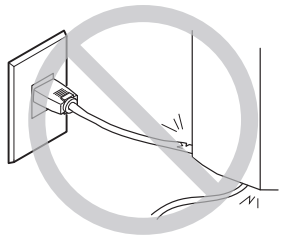

Ne jamais déposer aucun objet dessus au risque de les endommager.

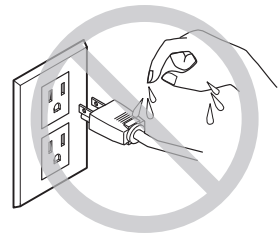

Ne jamais laisser mouiller.

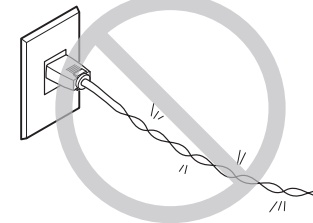

Ne jamais plier ni tordre avec une force excessive.

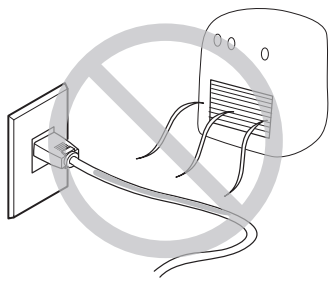

Ne jamais chauffer.

Ne jamais tirer avec une force excessive.

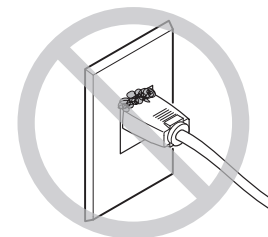

La poussière peut provoquer un incendie.

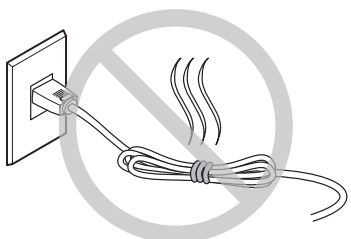

Ne jamais plier ni enrouler.

⚠ L'encre, les liquides nettoyants et les liquides usés sont inflammables et toxiques.

⚠ ATTENTION

Ne pas approcher une flamme nue de l'espace de travail.
L'encre et les liquides usés sont inflammables.

Ne jamais entreposer d'encre, de liquide de nettoyage ou de liquides usés dans les endroits suivants.

- un endroit exposé à une flamme nue;
- un endroit où il y a risque de température élevée;
- près d'eau de Javel, d'un autre agent d'oxydation ou de matériel explosif;
- tout endroit à la portée d'enfants;

Il y a risque d'incendie. L'ingestion accidentelle par un enfant peut présenter un risque pour la santé.

Ne placez jamais un récipient d'encre (tel qu'une cartouche ou une poche) dans le feu.
De l'encre pourrait couler, s'enflammer et le feu, se répandre à des objets proches.

⚠ ATTENTION

Ne jamais boire l'encre, le liquide de nettoyage ni les liquides usés, ne pas en respirer les vapeurs et ne pas laisser les produits entrer en contact avec les yeux ou la peau.
Cela est dangereux pour la santé.

⚠ PRUDENCE

S'assurer que le lieu de travail est bien aéré.
L'absence d'aération adéquate peut créer une situation dangereuse pour la santé ou un risque de combustion à cause des vapeurs qui émanent de l'encre.

Ne jamais soumettre un réservoir d'encre (cartouche ou poche) aux impacts et ne jamais tenter de le démonter.
De l'encre pourrait s'échapper.

⚠ En cas d'ingestion ou de trouble physique

- En cas de contact avec les yeux : rincer immédiatement et abondamment à l'eau courante pendant au moins 15 minutes. Si les yeux sont toujours irrités, consulter un médecin.
- En cas de contact avec la peau : laver immédiatement à l'eau et au savon. En cas d'irritation ou d'inflammation de la peau : consulter un médecin.
- En cas d'ingestion : ne pas provoquer le vomissement et demander immédiatement l'aide d'un médecin. Provoquer le vomissement peut créer un risque de suffocation.
- Si l'odeur cause un trouble physique, amener la personne dans un endroit bien aéré et la faire se reposer. Si l'étourdissement ou la nausée persistent, consulter un médecin.

* Se reporter à la fiche signalétique (FS) pour toute information sur les produits chimiques contenus dans l'encre et les instructions de sécurité associées.

⚠ Risque d'incendie, de brûlures ou d'émissions de gaz toxique

⚠ ATTENTION

Prudence : Température élevée
La zone autour de l'appareil UV-LED se réchauffe. Faire preuve de prudence pour éviter les brûlures.

⚠ Cet appareil utilise des rayons ultraviolets

⚠ PRUDENCE

Ne jamais regarder pendant de longues périodes le rayonnement blanc bleuté (ultraviolet) émis par la tête d'impression.
Le fait de regarder directement et de près le rayonnement ultraviolet pendant une période prolongée peut causer des lésions oculaires.

⚠ Prudence : Rayonnement ultraviolet

Cet appareil est muni de couvercles destinés à empêcher les fuites de rayonnement ultraviolet à faible niveau, mais sa manipulation ou son utilisation incorrectes peuvent causer des lésions dues au rayonnement ultraviolet. La gravité des lésions est fonction de l'intensité et de la longueur d'onde du rayonnement ultraviolet et de la durée de l'exposition. L'exposition prolongée à un fort rayonnement ultraviolet de longueur d'onde dangereuse peut causer des lésions oculaires ou cutanées. La prudence est de rigueur.

⚠ Vignettes d'avertissement

Des vignettes d'avertissement sont apposées pour qu'il soit facile de repérer les zones dangereuses. La signification des vignettes est donnée ci-dessous. Respecter les avertissements. Ne jamais retirer les vignettes et ne pas les laisser s'encrasser.

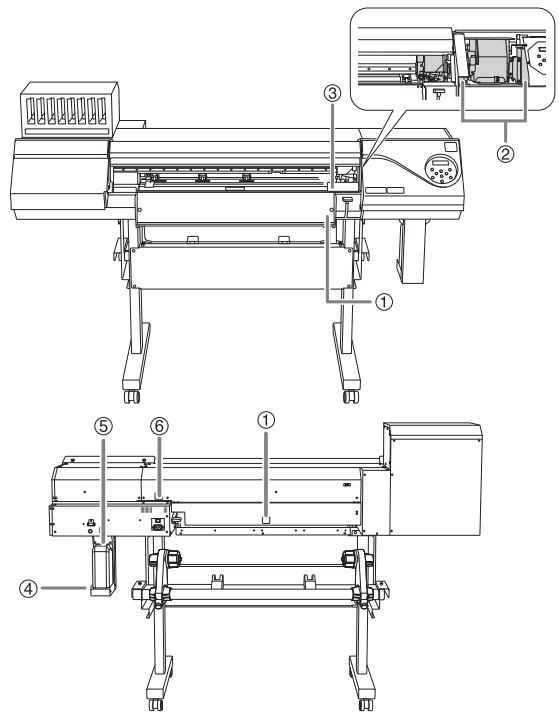

①		**Prudence : Rayonnement ultraviolet** Lorsque le couvercle est ouvert, vérifiez que la lampe UV est éteinte.
②		**Prudence : Température élevée** L'appareil UV-LED se réchauffe. Faire preuve de prudence pour éviter les brûlures.
③		**Prudence : Têtes d'impression mobiles** Les têtes d'impression à l'intérieur du couvercle se déplacent à grande vitesse et constituent un danger. N'insérez jamais vos mains ou vos doigts dans l'espace.
④		**L'encre, les liquides nettoyants et les liquides usés sont inflammables et toxiques.** Si ces liquides entrent en contact avec les yeux ou la peau, ils peuvent être dangereux pour la santé. Lors des travaux d'entretien, par exemple lors de l'élimination des liquides évacués, porter des lunettes de protection et des gants de protection (voir la fiche de sécurité [FS]).
⑤		**Inflammable** L'encre et les liquides usés sont inflammables. Tenir à l'écart des flammes nues.
⑥		**Faire preuve de prudence lorsque vous manipulez des objets lourds.** Tenter de soulever manuellement des objets trop lourds peut causer des blessures. La chute d'articles très lourds peut aussi causer des blessures.

1. Introduction

1. About the User's Manuals for This Machine 18
2. Checking Included Items 19

1. About the User's Manuals for This Machine

The following documentation is included with the machine.

Paper Manuals

- **Setup Guide**

  This manual contains details on how to install the machine and how to configure its initial settings.
- **Regular Maintenance Guide**

  This manual contains details on the machine's daily maintenance as well as on the maintenance that must be performed periodically.

Electronic-format Manual

- **User's Manual**

  This manual contains details such as how to use and maintain the machine as well as an FAQ (a set of frequently asked questions).

You can view and download the electronic-format manual from the following URL or QR code.

https://webmanual.rolanddg.com/LEC2-300

* You can also view and download the paper manuals.

* You can also view this website from a smartphone.

2. Checking Included Items

The following items are included with the machine. Make sure they are all present and accounted for.

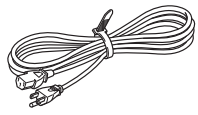 Power cord/power plug adapter (1 each)	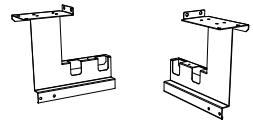 Arms (1 each for right and left)	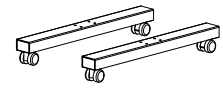 Casters (2)	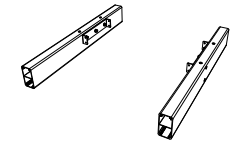 Stand legs (1 each for right and left)
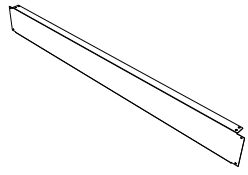 Stand stay (1)		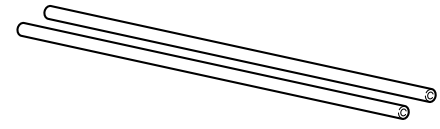 Shafts (2)	
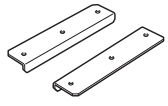 Shaft clamps (2)	Bolts (40)	Washers (12)	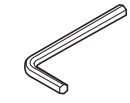 Hexagonal wrench (1)
Pipe (1)	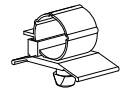 Cable clamps (2)	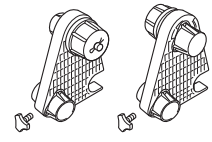 Media holders/retaining screws (1 each for right and left)	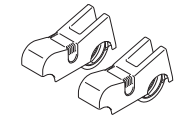 Media stays (2)
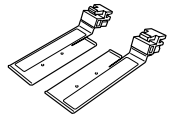 Media clamps* (1 each for right and left)	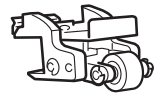 Middle pinch rollers* (2)	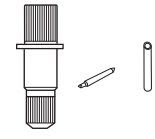 Blade holder/blade/pin (1 each)	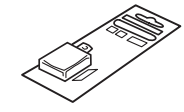 Replacement blade for separating knife (1)
Drain bottle (1)	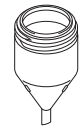 Drain funnel (1)	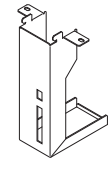 Drain bottle stand (1)	Cartridge-slot label (for four colors; 1)

* The media clamps and the middle pinch rollers are installed on the machine.

2. Checking Included Items

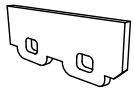 Replacement wiper (1)	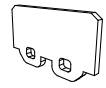 Replacement felt wiper (1)	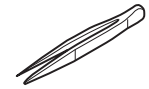 Tweezers (1)	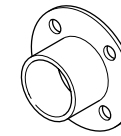 Connection adapter (1)
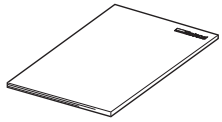 Setup Guide (this document; 1)	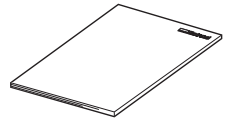 Regular Maintenance Guide (1)	Cleaning liquid (1)	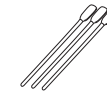 Cleaning sticks
Software RIP (1)	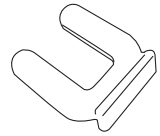 Caster holders (4)	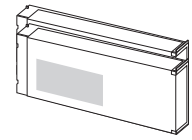 SOL INK cleaning cartridges (2)	

2. Installation

1. Checks before Installation 22
   - About Placement and Installation Work 22
   - Deciding On an Installation Site 22
   - Temperature and Humidity 23
   - Installation Space 23
   - Air Ventilation 23
2. Assembly and Ink Filling 24
   - Checks before Operations 24
   - Step 1: Assemble the Stand and Mount the Machine on the Stand 25
   - Step 2: Attach the Media Holders 28
   - Step 3: Install the Drain Bottle 30
   - Step 4: Remove and Store the Retainers 33
   - Step 5: Attach the Label 34
   - Step 6: Connect the Power Cord and the Cable 34
   - Step 7: Set the Language and the Units 36
   - Step 8: Fill the Machine with Ink 37
3. Installing the Cutting Tool 41
   - Step 1: Assemble the Cutting Tool 41
   - Step 2: Install the Cutting Tool 42
4. Network Settings 44
   - Step 1: Make the Network Settings for the Computer 44
   - Step 2: Make the Network Settings on the Printer 47
   - Step 3: Make the Port Settings for the Software RIP 49
5. Installation of Ventilating Equipment 50
   - Ventilating Equipment 50
   - Installing the Ventilating Equipment 50

1. Checks before Installation

About Placement and Installation Work

The placement and installation of this machine must be performed by suitably qualified workers.

⚠WARNING **Entrust operations such as transportation, unloading, and emplacement to trained professionals.**
Suitable equipment and technical skills are required in handling the machine. Tasks that require undue effort may result in a major accident.

Deciding On an Installation Site

Install the machine in a quiet, stable location offering good operating conditions. An unsuitable location can cause accidents, fire, faulty operation, or breakdown.

⚠WARNING **Install the machine in a location that is level, stable, and able to bear the weight of the machine.**
The total weight of the machine may reach over 150 kg (330.7 lb.). Installation in an unsuitable location may cause a major accident, including tip over, fall, or collapse.

⚠WARNING **Never install the machine outside or in any location where exposure to water or high humidity may occur.**
Current leakage may cause electrical shock or fire.

⚠WARNING **Never install the machine close to any flammable object or in a gas-filled location.**
Combustion or explosion could occur.

⚠WARNING **Install the machine in a clean, brightly lit location.**
Working in a location that is dark or cluttered may lead to an accident, such as becoming caught in the machine as the result of an inadvertent stumble.

⚠WARNING **Position the machine so that the power plug is within immediate reach at all times.**
This is to enable quick disconnection of the power plug in the event of an emergency. Install the machine next to an electrical outlet. Also, provide enough empty space to allow immediate access to the electrical outlet.

⚠CAUTION **Ensure adequate ventilation for the work area.**
Failing to perform ventilation may result in a health hazard or danger of combustion due to ink fumes.

Unsuitable installation sites

- Locations subject to large fluctuations in temperature or humidity
- Locations subject to shaking or vibration
- Locations where the floor is tilted, not level, or unstable
- Dusty locations
- Locations exposed to direct sunlight
- Locations near air-conditioning or heating equipment
- Locations exposed to water or moving air
- Locations exposed to considerable electrical or magnetic noise or other forms of electromagnetic energy

Temperature and Humidity

Maintain the specified temperature and humidity even when the machine is not in use. Failure to do so may result in malfunction.

- **During operation: Temperature: 15 to 32°C (59 to 90°F), humidity: 20 to 80%RH (no condensation)**
- **During non-operation: Temperature: 5 to 40°C (41 to 104°F), humidity: 20 to 80%RH (no condensation)**

Installation Space

The space shown in the figure is required in order to use this machine.

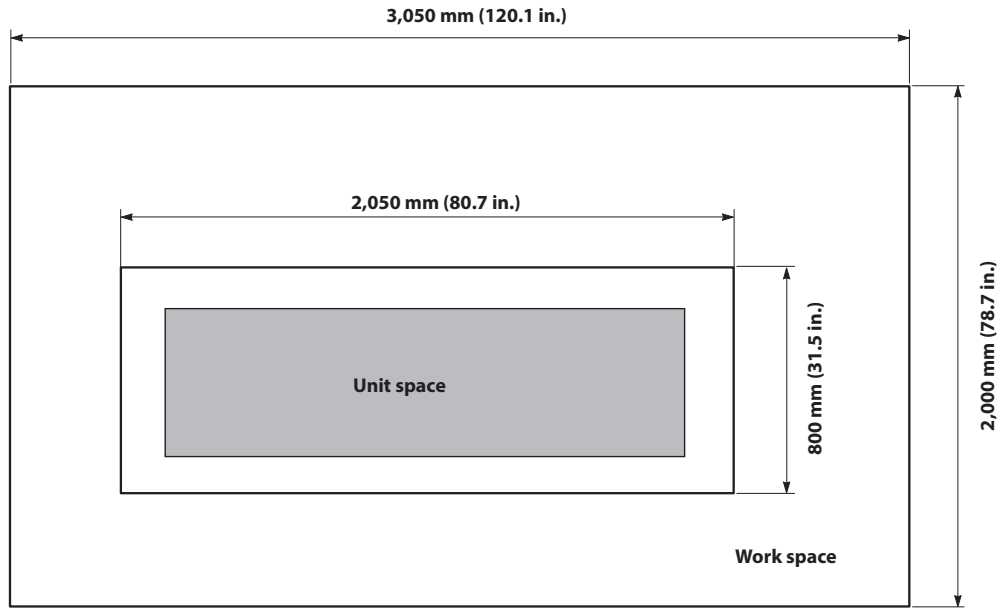

Air Ventilation

This machine emits a small amount of volatile compounds during printing and for some time after printing, which may cause irritation of your eyes, nose, and throat. To use this machine, make sure to install ventilating equipment to ensure adequate ventilation.

☞ P. 50 "5. Installation of Ventilating Equipment"

2. Assembly and Ink Filling

Checks before Operations

Completed Drawing

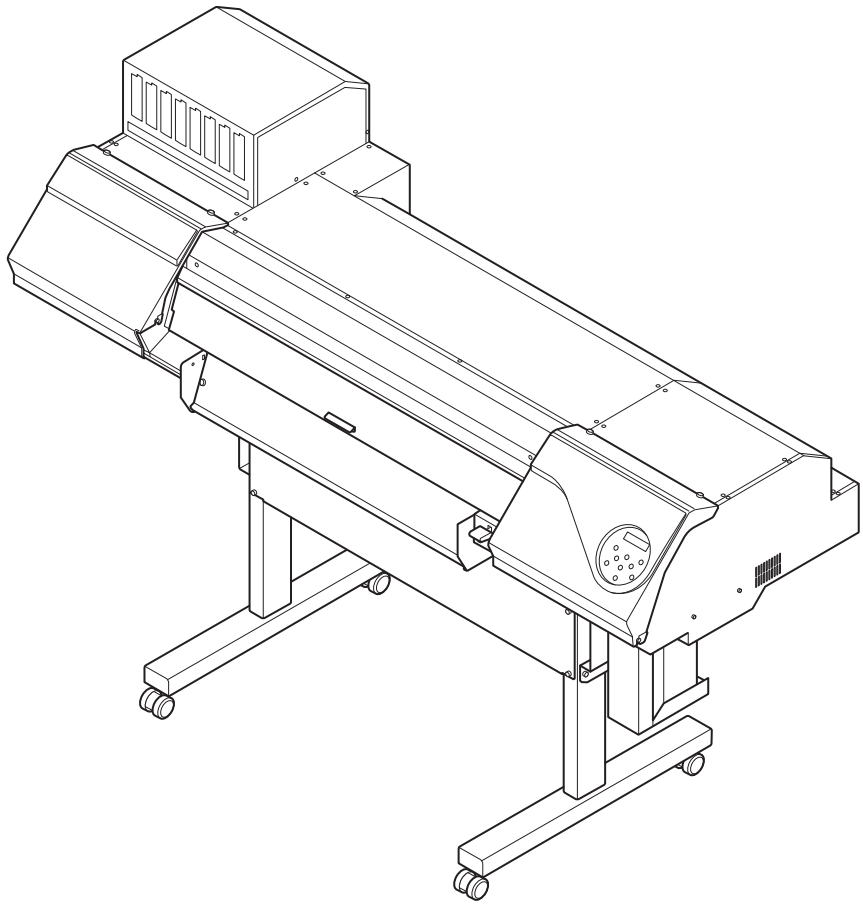

Necessary Tools (Included Items)

- Hexagonal wrench (1)
- Pipe (Use this when the hexagonal wrench is too short to easily tighten bolts) (1)
- Bolts (40)
- Washers (12)

Step 1: Assemble the Stand and Mount the Machine on the Stand

⚠WARNING **Perform this task with all power switches left switched off.**
Failure to observe this instruction may cause the machine to move suddenly, resulting in injury.

⚠CAUTION **Unloading and emplacement are operations that must be performed by 6 persons or more.**
Tasks that require undue effort when performed by a small number of persons may result in physical injury. Also, if dropped, such items may cause injury.

Procedure

1 **Attach the stand stay to the stand legs.**

Position the stand legs so that their U-shaped brackets face the inside, and then tighten the bolts securely (eight locations in total) in the order shown below. Loose bolts may cause the stand to wobble.

① **Temporarily tighten the bolts in the two upper locations. (On the left and right sides for a total of four locations.)**
② **Temporarily tighten the bolts in the two locations on the sides. (On the left and right sides for a total of four locations.)**
③ **Fully tighten the bolts in the two upper locations. (On the left and right sides for a total of four locations.)**
④ **Fully tighten the bolts in the two locations on the sides. (On the left and right sides for a total of four locations.)**

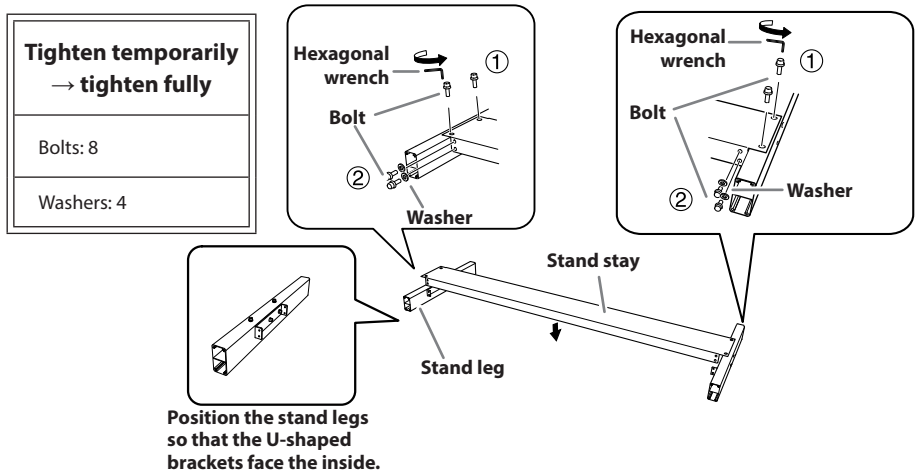

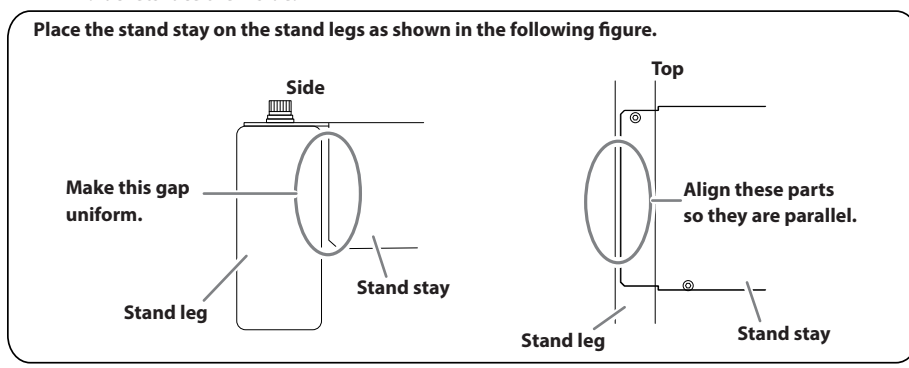

2 Attach the casters onto the stand leg.

Attach the casters so that they are a long distance from the stand stay. The casters have no particular front and rear orientation. Tighten the bolts securely (eight locations in total). Loose bolts may cause the stand to wobble.

Tighten fully
Bolts: 8

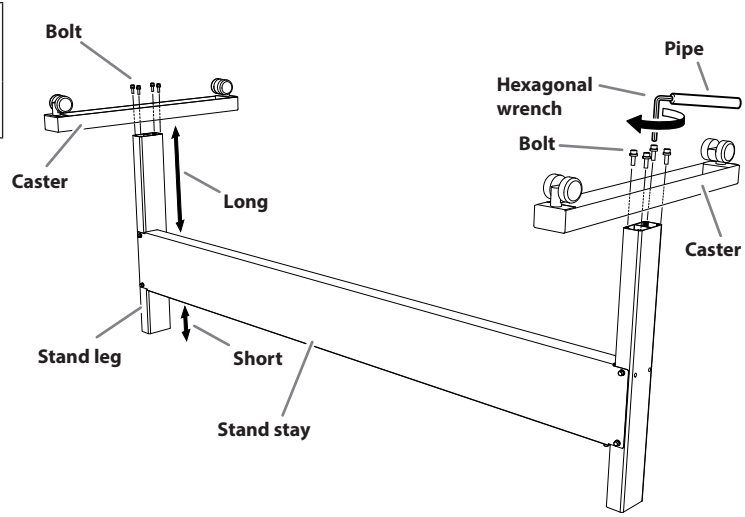

3 Attach the arms to the stand.

Set the stand upright, and then fix the arms in place on the stand by tightening the bolts securely (12 locations in total on the left and right arms) in the order shown below. Loose bolts may cause the stand to wobble.

① **Temporarily tighten the bolts in the four upper locations. (On the left and right sides for a total of eight locations.)**

② **Temporarily tighten the bolts in the two locations on the sides. (On the left and right sides for a total of four locations.)**

③ **Fully tighten all the bolts to completely fix the arms in place on the stand.**

Tighten temporarily → tighten fully
Bolts: 12

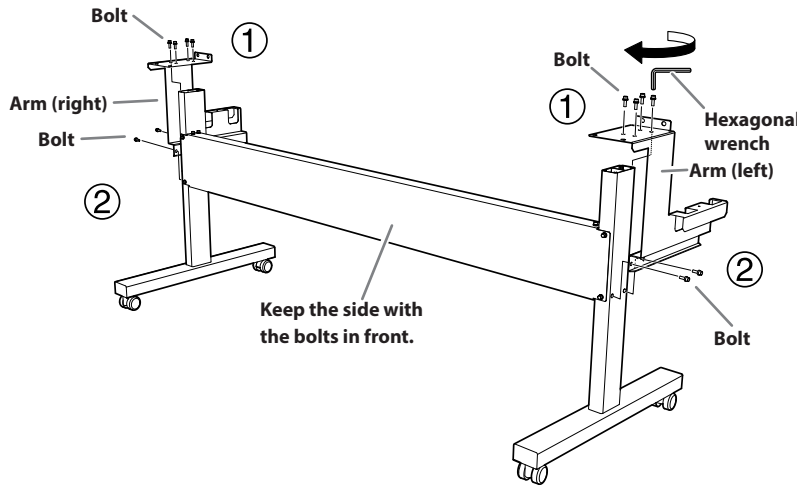

4 Place the machine on the stand.

Align the holes on the bottom of the machine with the protrusions on the arms. Tighten the bolts securely (eight locations in total). Loose bolts may cause the stand to wobble.

Tighten fully
Bolts: 8
Washers: 8

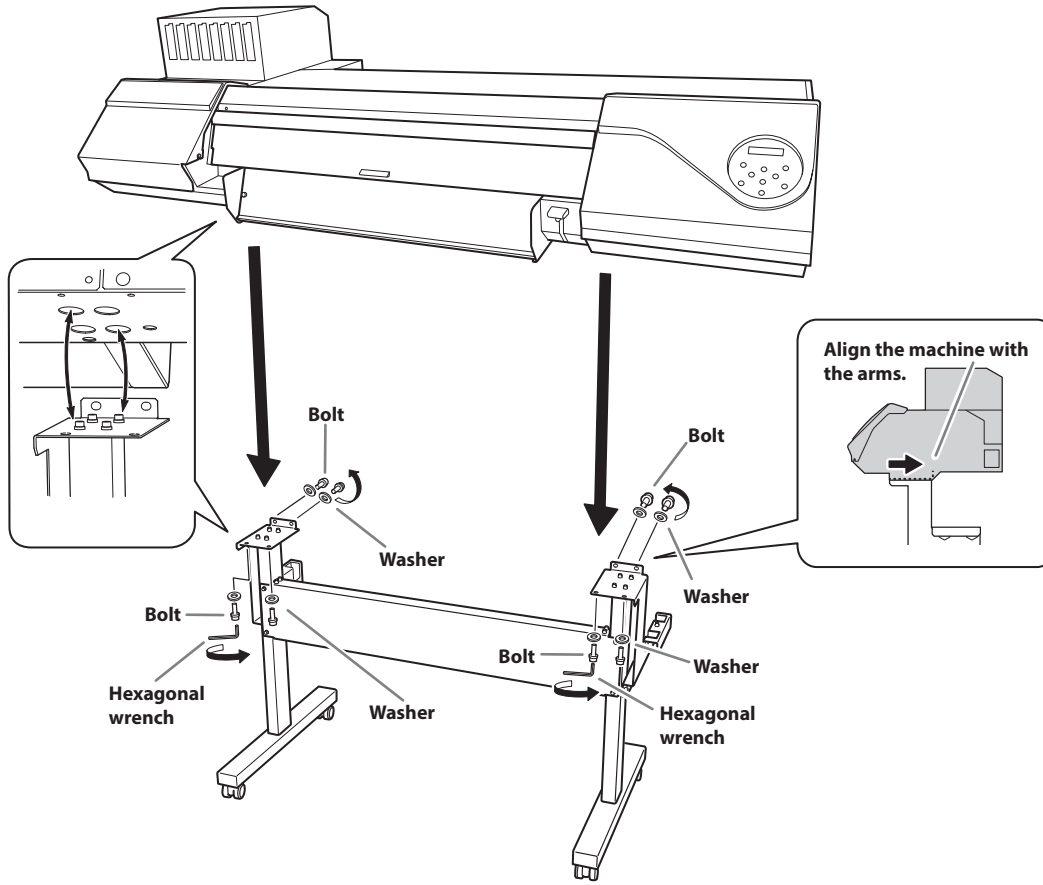

Step 2: Attach the Media Holders

⚠WARNING **Perform this task with all power switches left switched off.**
Failure to observe this instruction may cause the machine to move suddenly, resulting in injury.

Procedure

1 **Place the shafts on the stand.**

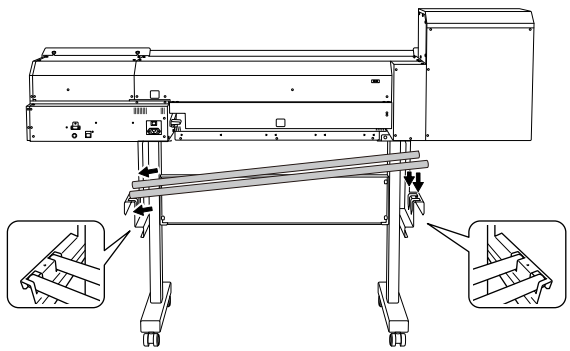

2 **Pass the left media holder onto the shafts.**

Pass it through from the right edge as seen from the rear of the machine.

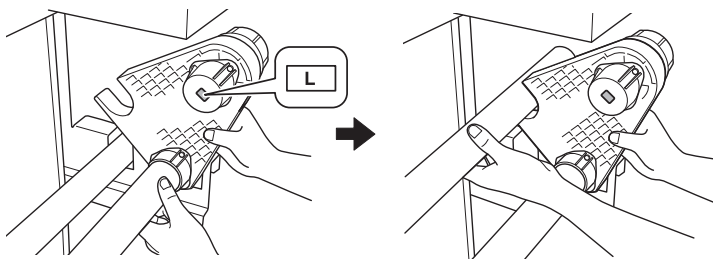

3 **Move the left media holder to the left side of the shafts, and then attach the retaining screw.**

It is sufficient to tighten the retaining screw lightly.

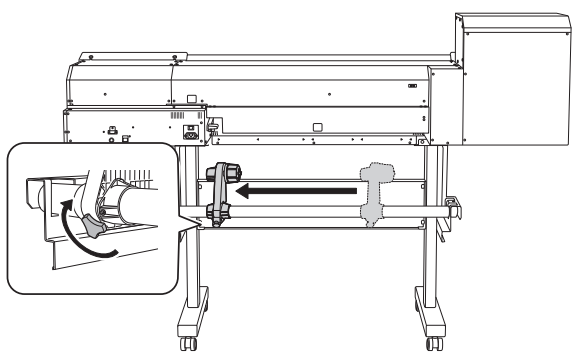

4 **Lift up the front shaft and rear shaft at the same time.**

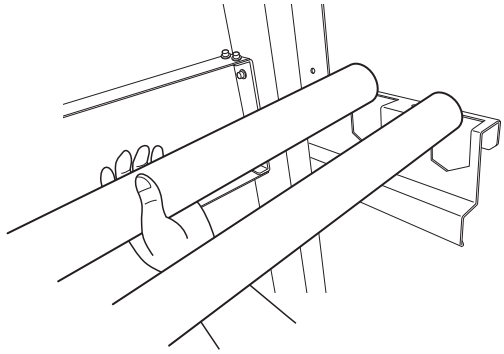

5 **Pass the rear shaft through the media stays.**

Pass the rear shaft through the two media stays.

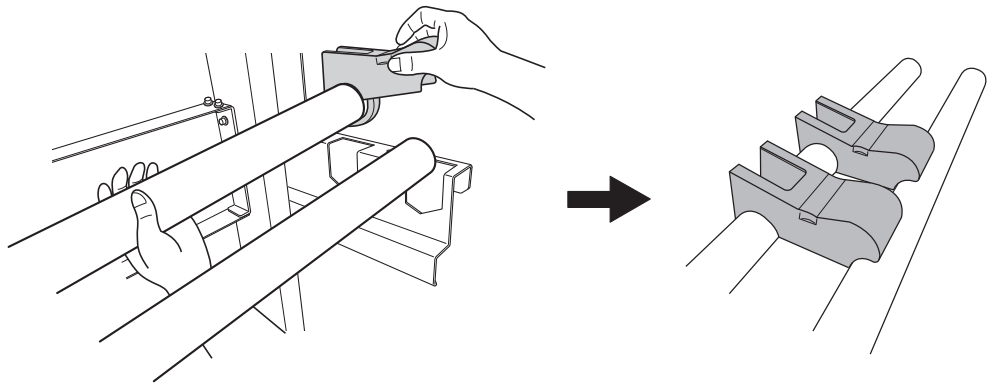

6 **Pass the right media holder onto the shafts, and then attach the retaining screw.**

It is sufficient to tighten the retaining screw lightly.

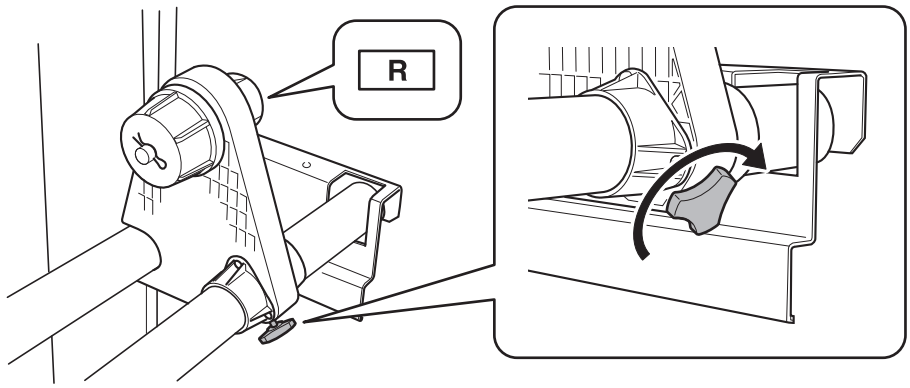

7 **Attach the shaft clamps to secure the shafts in place.**

To ensure the media holders do not get caught in the shaft clamps, do not place the media holders too close to the edges.

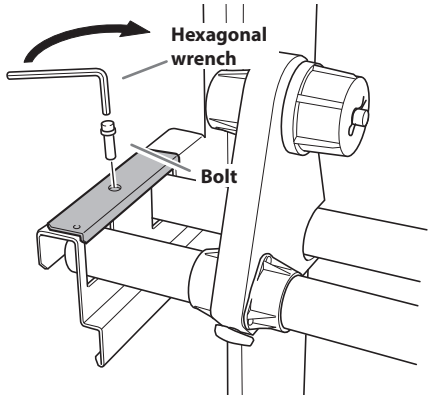

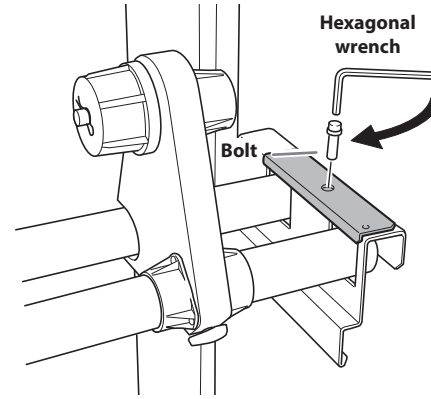

Step 3: Install the Drain Bottle

⚠WARNING **Perform this task with all power switches left switched off.**
Failure to observe this instruction may cause the machine to move suddenly, resulting in injury.

Procedure

1 **Remove the bottom plug.**

Discharged fluid used in the inspection when the printer was shipped may remain. Exercise caution.

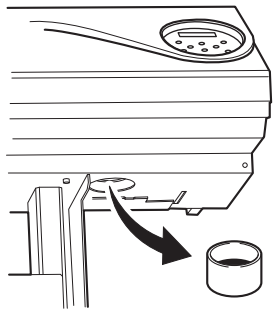

2 **Install the drain funnel.**

Screw the drain funnel all the way into the hole where the bottom plug was attached.

IMPORTANT

Use caution to turn the bottle without applying excessive force.

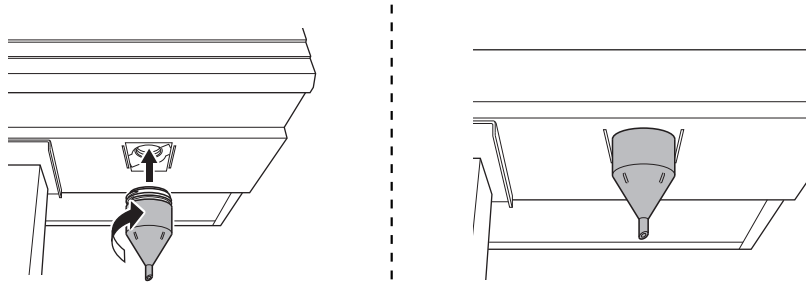

3 **Install the drain bottle stand.**

Insert the drain bottle stand into the groove on the bottom surface of the printer unit, and then shift the drain bottle stand to the left.

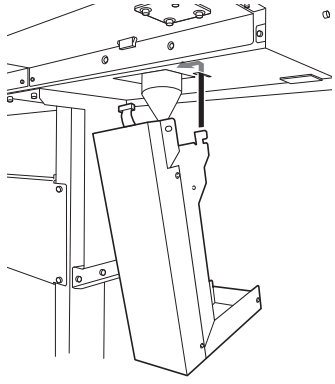

4 **Attach the cable to the printer unit, and then secure the drain bottle stand in place.**

Tighten the bolts securely (2 locations in total).

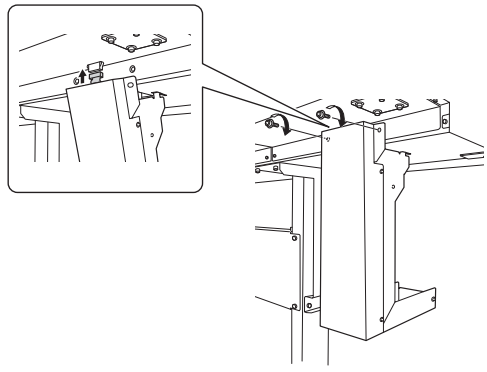

Tighten fully
Bolts: 2

5 Install the drain bottle in the bottle stand.

Insert the drain bottle to the back, as far as it will go.

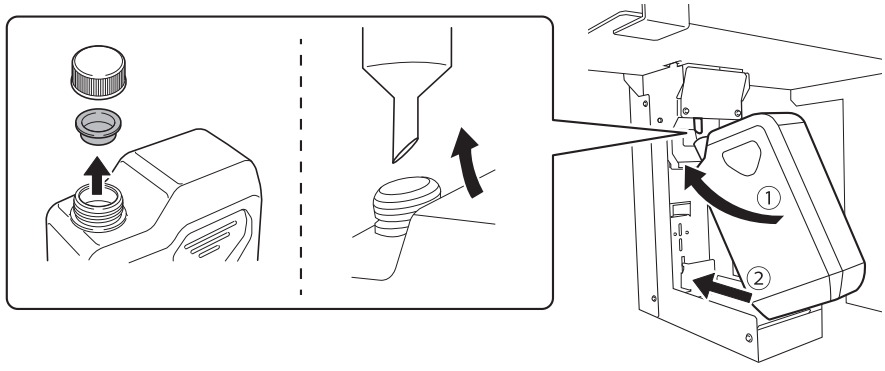

IMPORTANT: Leave the drain bottle attached at all times.

Only remove the drain bottle when you are disposing of the discharged fluid. Unnecessarily removing the drain bottle may lead to the discharged fluid spilling.

Step 4: Remove and Store the Retainers

IMPORTANT

- Make sure to remove all the retainers. Any that remain may cause faulty operation or breakdown when the power is switched on.
- Store the retainers because they are needed again when transporting the machine.

Procedure

1 **Remove all the retainers indicated by A, B, and C.**

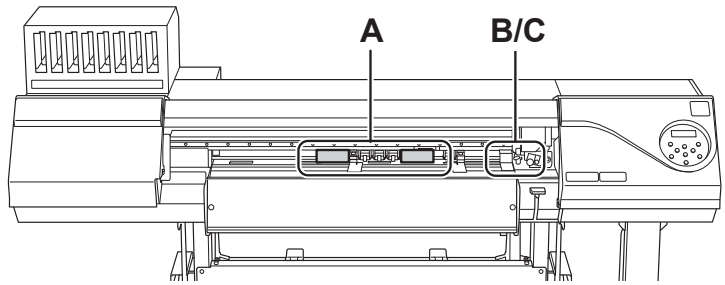

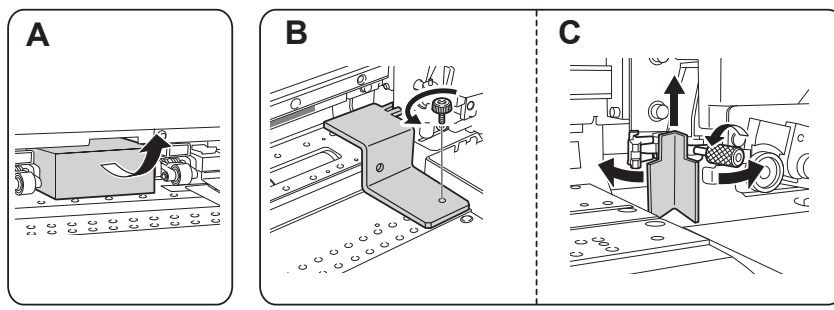

2 **Install the retainer indicated by B at the position indicated in the figure for storage.**

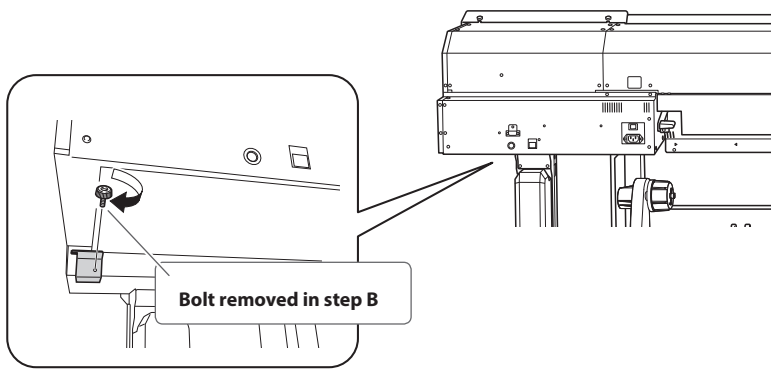

Step 5: Attach the Label

This work is required when using the machine with four colors (CMYK).

Items Used in this Procedure

Included items	Cartridge-slot label (for four colors)

Step 6: Connect the Power Cord and the Cable

Procedure

1 **Insert the cable clamp.**

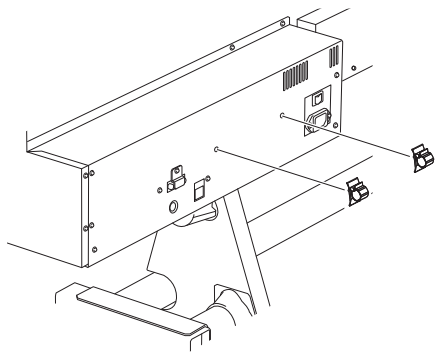

2 **Connect both the power cord and the Ethernet cable (commercially available).**

Use a power plug adapter if the electrical outlet is a two-prong outlet.

⚠WARNING **Perform this task with all power switches left switched off.**
Sudden movement of the machine may cause injury.

⚠WARNING **Connect to an electrical outlet that complies with this machine's ratings (for voltage, frequency, and current).**
Incorrect voltage or insufficient current may cause fire or electrical shock.

⚠WARNING **Connect the machine to ground.**
This can prevent fire or electrical shock due to current leakage in the event of malfunction.

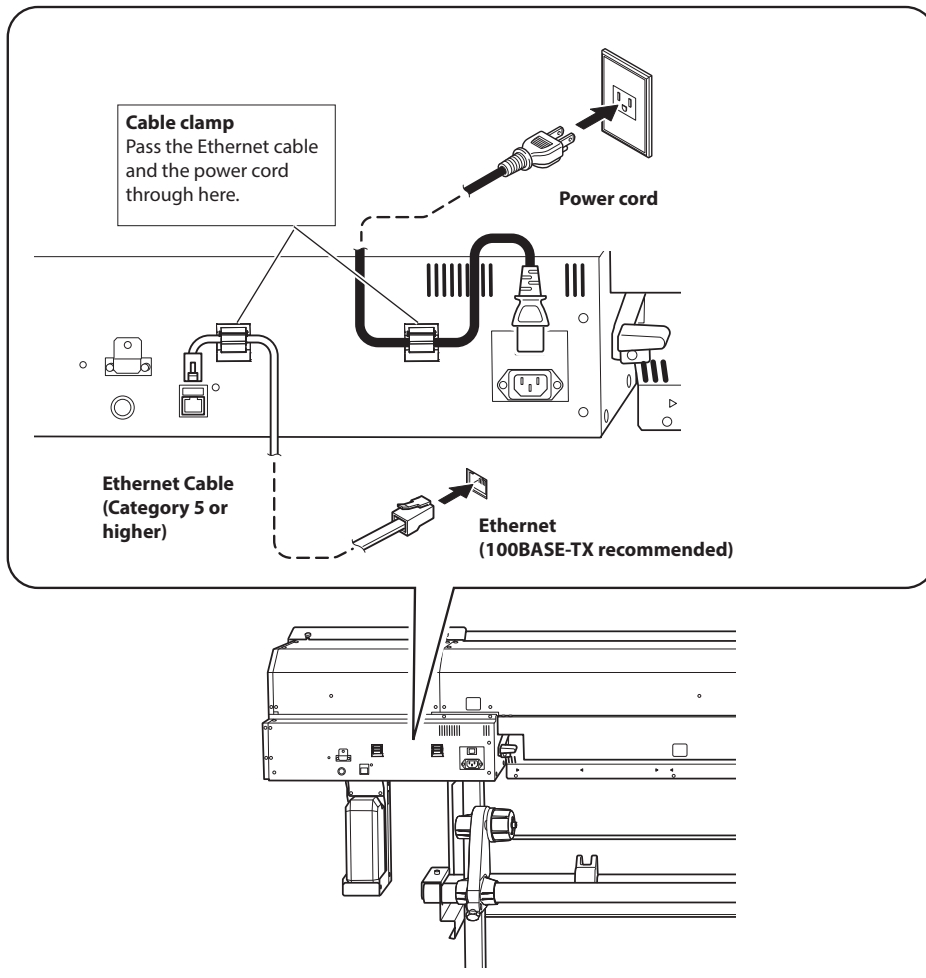

3 **Fine-tune the orientation of the machine, and then adjust the stand casters.**

① **Face the casters to the front.**

② **Lock the casters.**

③ **Use the caster holders to fix the casters in place.**

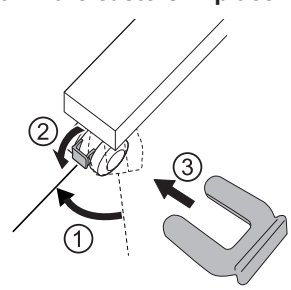

Step 7: Set the Language and the Units

Procedure

1. **Close the front cover.**

2. **Turn on the main power switch.**

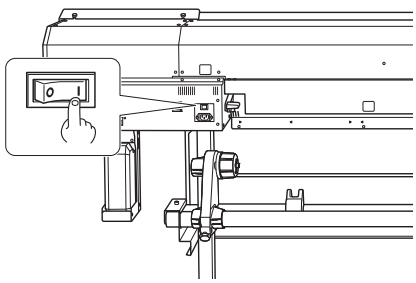

3. **Hold down [MENU] and press the sub power switch.**

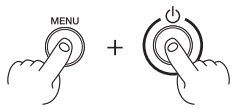

4. **Press [▲] or [▼] to select the language you want, and then press [ENTER].**

5. **Press [▲] or [▼] to select the unit of measurement you want (for length), and then press [ENTER].**

6. **Press [▲] or [▼] to select the unit of measurement you want (for temperature), and then press [ENTER].**

Step 8: Fill the Machine with Ink

Firstly, clean the print heads with cleaning liquid when installing ink cartridges for the first time after shipment from the factory. After cleaning, fill the machine with the ink of each color.
The on-screen messages indicate which ink cartridges to insert and remove and when to insert and remove them.
Follow the instructions given in P. 38 "2. Clean the print heads using the SOL INK cleaning cartridges." and P. 39 "3. Insert the ink cartridge for each color.".

Items Used in this Procedure

- Two SOL INK cleaning cartridges
- The ink cartridges to be used

IMPORTANT

- Be sure to use new SOL INK cleaning cartridges and ink cartridges.
- Never, under any circumstances, use anything other than the specified type of ink or cleaning liquid.

Installing the Ink Cartridges

IMPORTANT

- Insert each color ink cartridge into the slot labeled with the matching color. Inserting an incorrect cartridge may lead to breakdowns. Be careful not to insert the wrong cartridges. If you insert an incorrect cartridge by mistake, contact your authorized Roland DG Corporation dealer.
- Be sure to insert cartridges horizontally. Otherwise, cleaning and filling may not be performed properly.

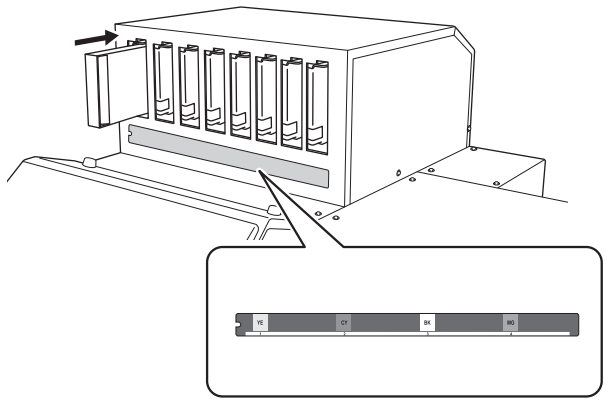

1. Select the ink type.

1 Press [▲] or [▼] to select the ink type, and then press [ENTER].

Name to select	Cyan (C) Magenta (M) Yellow (Y) Black (K)	White (W)	Gloss (GI)
ECO-UV4 4COLOR	○		
ECO-UV4 6COLOR	○	○	○

2 Press [◄] or [►] to select [YES], and then press [ENTER].

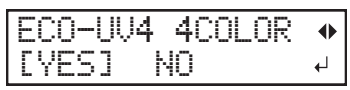

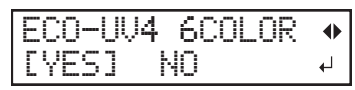

If the ink type is incorrect, select [NO], and then press [ENTER] to start again from step 1.

3 Make sure the drain bottle is installed.

4 Press [ENTER] to confirm your entry.

2. Clean the print heads using the SOL INK cleaning cartridges.

1 When the following screen is displayed, remove the cartridges whose slot numbers are flashing.

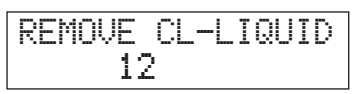

2 When the following screen is displayed, insert SOL INK cleaning cartridges into the slots whose numbers are flashing.

The SOL INK cleaning cartridges are not differentiated by color.

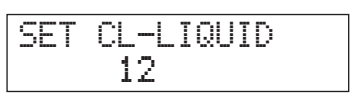

The screen shown below appears.

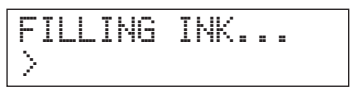

❸ **When the following screen is displayed, remove the SOL INK cleaning cartridges whose slot numbers are flashing.**

```
REMOVE CL-LIQUID
     12
```

❹ **When the following screen is displayed, insert SOL INK cleaning cartridges into the slots whose numbers are flashing.**

The SOL INK cleaning cartridges are not differentiated by color.

```
SET CL-LIQUID
      34
```

The screen shown below appears.

```
FILLING INK...
>
```

❺ **When the following screen is displayed, remove the SOL INK cleaning cartridges whose slot numbers are flashing.**

```
REMOVE CL-LIQUID
      34
```

❻ **Repeat steps ❷ to ❺ until the screen shown below appears.**

```
SET CARTRIDGE
   12345678
```

3. Insert the ink cartridge for each color.

❶ **Before inserting ink cartridges, shake each of them 50 times (about 20 seconds).**

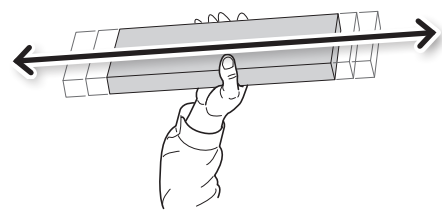

The precipitation of the ingredients in the ink disables printing in normal color. So that the ink mixes well, shake the ink cartridge horizontally with a stroke length of around 5 cm (2 in.) from each end of the ink cartridge.

2 **When the following screen is displayed, insert an ink cartridge for each color.**

```
SET CARTRIDGE
    12345678
```

Insert the ink cartridge for each color.

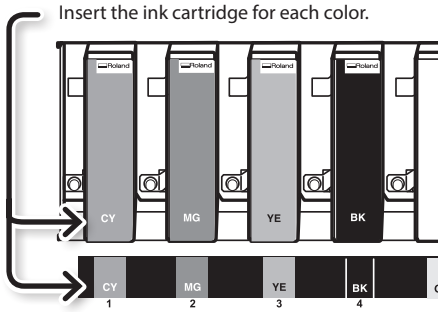

When ink cartridges are inserted in all the slots, the following screen appears.

```
FILLING INK...
>
```

3 **When the screen shown below appears, remove the drain bottle and discard the discharged fluid.**

```
EMPTY
  DRAIN BOTTLE ↵
```

IMPORTANT

When you remove the drain bottle, a few drops of discharged fluid may come out of the machine. Exercise caution to prevent this fluid from soiling your hands.

4 **Quickly attach the emptied drain bottle to the machine once more.**

5 **Make sure the drain bottle is installed, and then press [ENTER].**

When the following screen is displayed, filling with ink is finished.

```
SETUP SHEET
```

6 **Close the front cover.**

3. Installing the Cutting Tool

⚠CAUTION **Be sure to perform operations as specified by the instructions, and never touch any area not specified in the instructions.**
Sudden movement of the machine may cause injury.

⚠CAUTION **Never touch the tip of the blade.**
Doing so may result in injury. The cutting performance of the blade will also be impaired.

Step 1: Assemble the Cutting Tool

Required items		
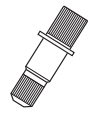		
Blade holder	Blade	Pin

Procedure

1 **Insert the pin.**

Insert the pin to the position where its end sticks out about 3 to 5 millimeters (0.12 to 0.20 in.).

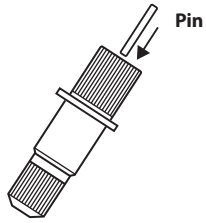

2 **Insert the blade.**

Insert the blade into the hole.

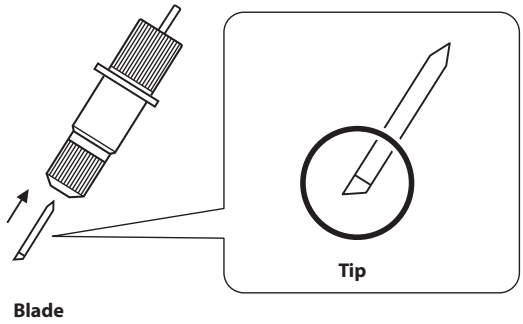

Step 2: Install the Cutting Tool

1. Enter the "REPLACE BLADE" menu.

1 **Press [MENU].**

2 **Press [▼] several times to display the screen shown below.**

```
MENU                ◆
SUB MENU            ▶
```

3 **Press [►] once, and then press [▼] several times to display the screen shown below.**

```
SUB MENU            ◆
MAINTENANCE         ▶
```

4 **Press [►] once, and then press [▼] several times to display the screen shown below.**

```
MAINTENANCE         ◆
REPLACE KNIFE       ↵
```

5 **Press [ENTER].**

The cutting carriage moves to a position where blade replacement is possible.

6 **When the following screen is displayed, open the front cover.**

```
OPEN FRONT
          COVER
```

Preparations are complete when this screen appears.

```
FINISHED?
                    ↵
```

2. Install the cutting tool.

1 **Loosen the cutting carriage screw.**

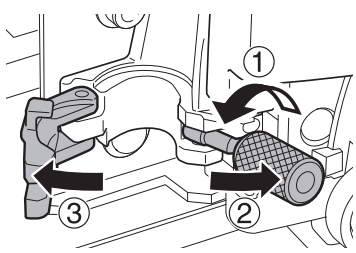

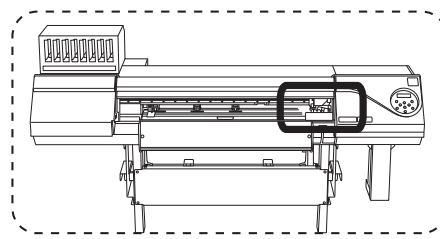

2 **Install the cutting tool in the cutting carriage.**

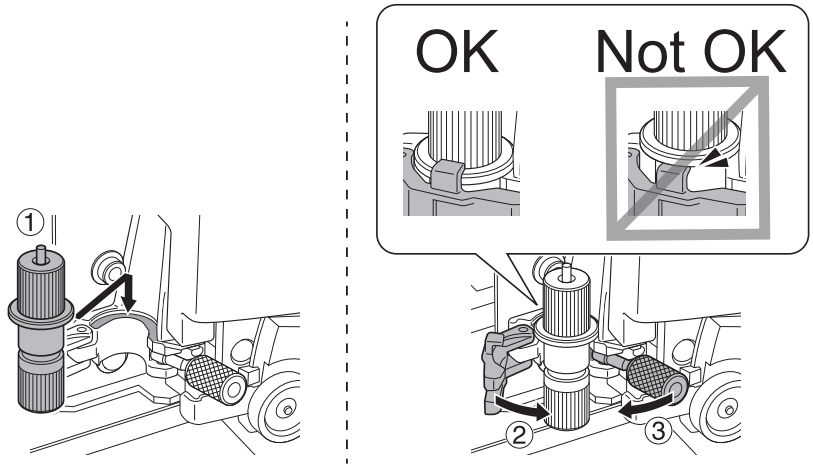

3 **Tighten the screw.**

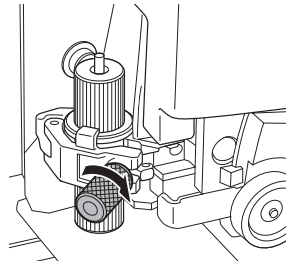

4 **Close the front cover.**

5 **Press [ENTER].**

IMPORTANT: Handling the cutting carriage

Leave the cutting-carriage screw loose when no cutting tool is installed. Keeping the screw firmly tightened causes the cutting tool insertion hole to become gradually smaller, making installation difficult.

4. Network Settings

The examples used in the procedures for making the settings described in this section assume you are using one computer and one machine. The settings used in this section are merely example settings. The procedures and setting values described here may not be suitable for all operating environments.
If the computer you're using is connected to a number of networked devices or to the Internet, incorrect settings may adversely affect the entire network. For detailed information about the settings, consult your network administrator.

Step 1: Make the Network Settings for the Computer

Procedure

1. **Log on to Windows as the "Administrator" or a member of the "Administrators" group.**

2. **Display the network connections screen.**

Windows 10:

① **From the [Start] menu, click [Settings], and then click [Network & Internet].**

② **Click [Network and Sharing Center].**

③ **Click [Ethernet] or [Wi-Fi].**

Windows 8.1:

① **From the [Start] menu, click [PC settings], and then click [Control Panel].**

② **Click [Network and Internet], and then click [Network and Sharing Center].**

③ **Click [Ethernet] or [Wi-Fi].**

Windows 7:

① **From the [Start] menu, click [Control Panel].**

② **Click [Network and Internet], and then click [Network and Sharing Center].**

③ **Click [Local Area Connection] or [Wireless Network Connection].**

3 Click [Properties].

The [Ethernet Properties] dialog box (or the [Local Area Connection Properties] dialog box on Windows 7) appears.

If the [User Account Control] dialog box appears, click [Continue].

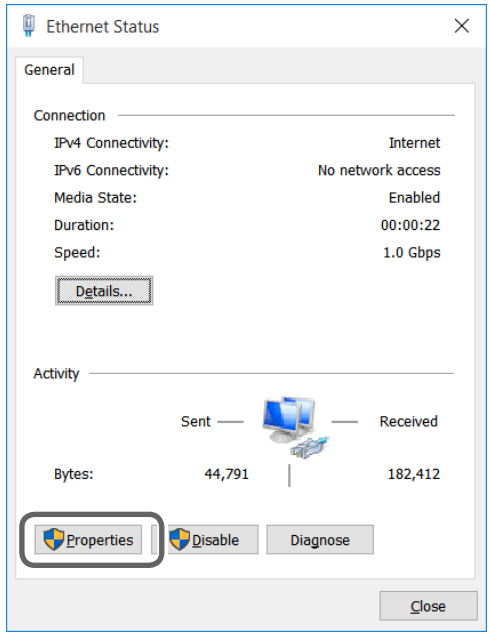

4 Select [Internet Protocol Version 4 (TCP/IPv4)], and then click [Properties].

If the [Internet Protocol] check box is clear, select it.

The [Internet Protocol Version 4 (TCP/IPv4) Properties] dialog box appears.

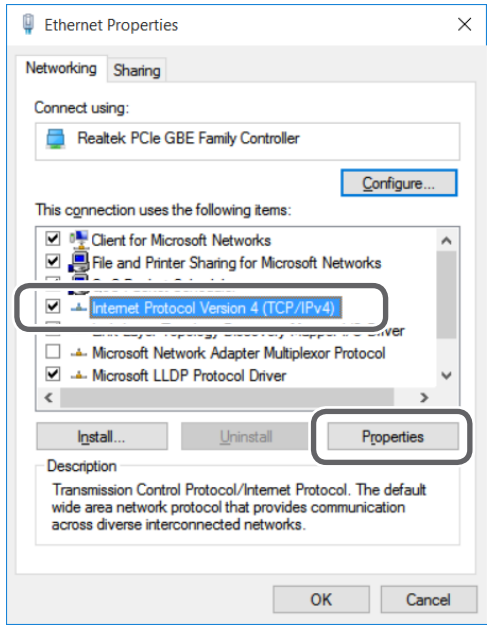

5 **Select [Use the following IP address]. Enter the information as shown below, and then click [OK].**

Item	Address to enter
IP address	192.168.0.XXX
Subnet mask	255.255.255.0

Here, "XXX" can be any number from 1 to 254. However, be sure to specify a number that is different from the numbers used for other computers and devices.

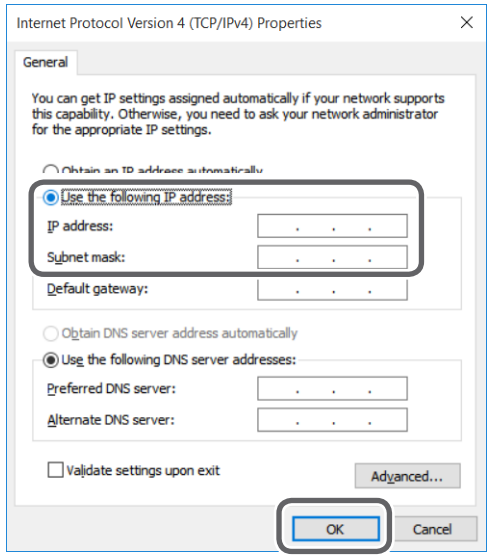

6 **Close this window to return to the original state.**

Windows 10, 8.1

Click [OK] in the [Internet Protocol Version 4 (TCP/IPv4) Properties] dialog box, click [Close] in the [Ethernet Properties] dialog box, and then click [Close] in the [Ethernet Status] dialog box.

Windows 7

Click [OK] in the [Internet Protocol Version 4 (TCP/IPv4) Properties] dialog box, click [Close] in the [Local Area Connection Properties] dialog box, and then click [Close] in the [Local Area Connection Status] dialog box.

Step 2: Make the Network Settings on the Printer

1. Set the IP address.

1. **Press [MENU].**

2. **Press [▼] several times to display the screen shown below.**

```
MENU              ◀◆
SYSTEM INFO.       ▶
```

3. **Press [▶] once, and then press [▼] several times to display the screen shown below.**

```
SYSTEM INFO.      ◀◆
NETWORK            ▶
```

4. **Press [▶] three times to display the screen shown below.**

```
IP ADDRESS        ◀◆▶
000.000.000.000↵
```

5. **Press [▲] or [▼] to select the address number.**

6. **Press [▶].**

7. **Repeat steps 5 and 6 to set [IP ADDRESS] (192.168.000.XXX).**

   Here, "XXX" can be any number from 001 to 254. However, be sure to specify a number that is different from the setting you made in Step 1 and from the numbers used for other computers and devices.

   For the part corresponding to "192.168.000," apply the same value as the setting of your computer.

   Here, "192.168.000.003" is entered by way of example.

```
IP ADDRESS        ◀◆▶
192.168.000.003↵
```

8. **When you have finished making the setting, press [ENTER].**

9. **Press [◀] to go back to the screen shown below.**

```
NETWORK           ◀◆
IP ADDRESS         ▶
```

2. Set the subnet mask.

1 Press [▼] to display the screen shown below.

2 Press [►] twice to display the screen shown below.

3 Press [▲] or [▼] to select the address number.

4 Press [►].

5 Repeat steps 3 and 4 to set [SUBNET MASK] to "255.255.255.000."

Note: For the subnet mask, make the setting the same value as the one used by the computer. Here, "255.255.255.000" is entered by way of example.

6 When you have finished making the setting, press [ENTER].

7 Press [◄] to go back to the screen shown below.

If you are using the computer and the machine on a one-to-one basis, this completes the settings to make on the printer.

Press [MENU] to go back to the original screen. Then, proceed to P. 49 "Step 3: Make the Port Settings for the Software RIP".

If you need to set the gateway address, proceed to the following procedure.

3. Set the gateway address.

1 **Press [▼] to display the screen shown below.**

2 **Press [►] twice to display the screen shown below.**

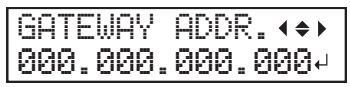

3 **Press [▲] or [▼] to select the address number.**

4 **Press [►].**

5 **Repeat steps 3 and 4 to set [GATEWAY ADDR.] to "255.255.255.255."**

For the value to enter for your gateway address, consult your network administrator. Here, "255.255.255.255" is entered by way of example.

6 **When you have finished making the setting, press [ENTER].**

7 **Press [MENU] to go back to the original screen.**

Step 3: Make the Port Settings for the Software RIP

The settings for the software RIP will be made here. For settings information, refer to the documentation for the software RIP.

Confirming that a network connection has been established

Refer to the documentation for the software RIP you are using.

5. Installation of Ventilating Equipment

Ventilating Equipment

In preparing ventilating devices, please note the following points.

- You will be required to use the ventilating devices recommended by Roland DG Corporation. For the details of the recommended products, contact your authorized Roland DG Corporation dealer.
- You will need a hose to connect the ventilating equipment and this machine.
  Connecting port diameter: 38 mm (1.5 in.)

Installing the Ventilating Equipment

The 3 mm (0.1 in.) hexagonal wrench is not included. It must be provided separately.

Procedure

1 Remove the panel on the right base of the machine.

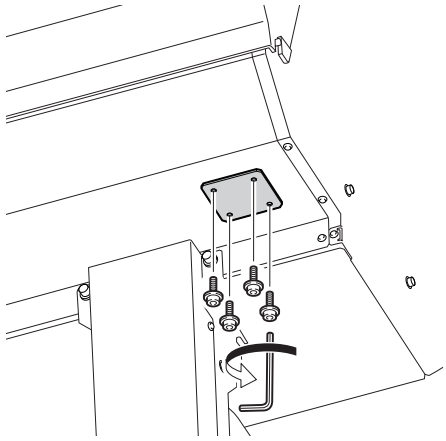

2 Attach the connection adapter.

Use the screws that secured the panel in place on the right base of the machine.

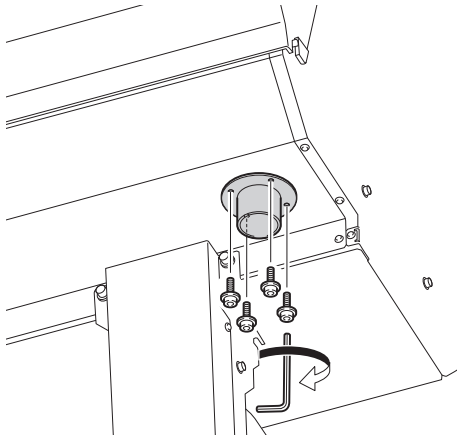

3 **Attach the hose to the connection port on the machine.**

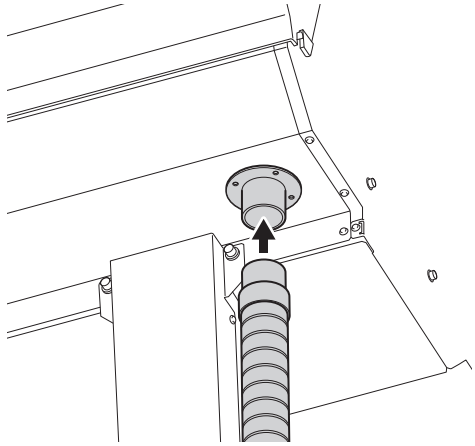

3. Appendix

Location of the Power Rating and Serial Number Label 54
Specifications 55

Location of the Power Rating and Serial Number Label

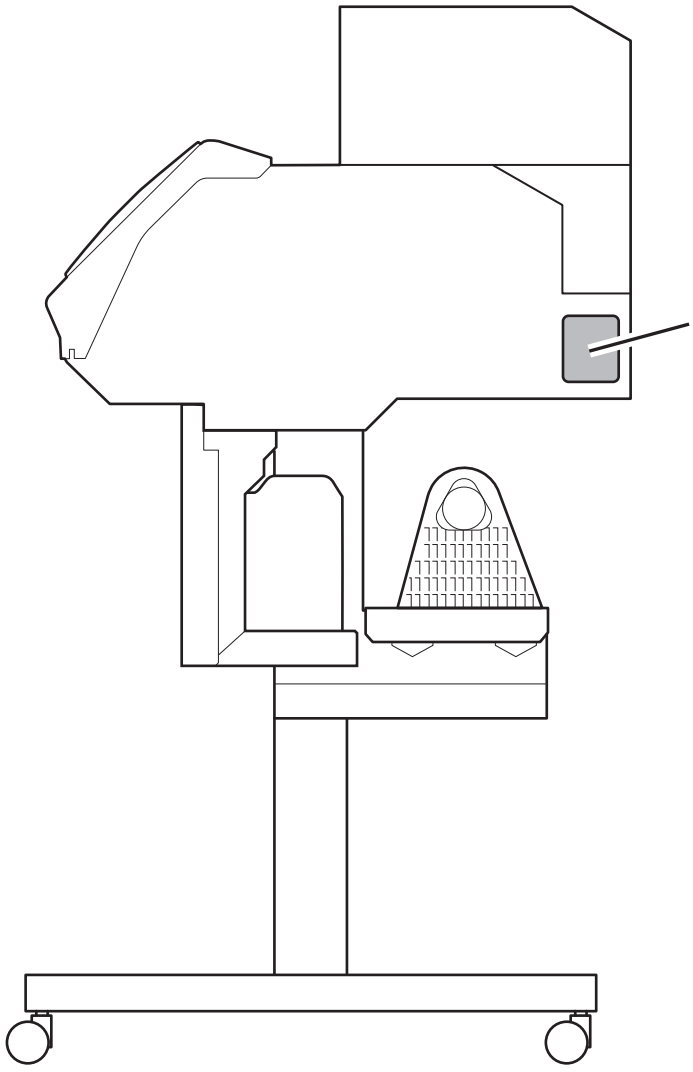

Serial number
This number is required when you seek maintenance, servicing, or support. Never peel off the label.

Power rating
Use an electrical outlet that meets the requirements for voltage, frequency, and amperage given here.

Specifications

		LEC2-300
Printing method		Piezo ink-jet method
Media	**Width**	182 to 762 mm (7.2 to 30 in.)
	Thickness	Max. 1.0 mm (39 mil) with liner, for printing Max. 0.4 mm (16 mil) with liner and 0.22 mm (9 mil) without liner, for cutting
	Roll outer diameter	Max. 210 mm (8.3 in.)
	Roll weight	Max. 25 kg (55 lb.)
	Core diameter (*1)	76.2 mm (3 in.) or 50.8 mm (2 in.)
Printing/cutting width (*2)		Max. 736 mm (29 in.)
Ink	**Type**	ECO-UV (EUV4) 220 ml cartridge ECO-UV (EUV4) 500 ml cartridge (White ink is not available in 500 ml cartridge.)
	Color	Six colors (cyan, magenta, yellow, black, white, and gloss) Four colors (cyan, magenta, yellow, and black)
Ink-curing unit		Built-in UV-LED lamp
Printing resolution (dots per inch)		Max. 1440 dpi
Cutting speed		10 to 300 mm/s (0.4 to 11.8 in/s)
Blade force (*3)		30 to 500 gf
Blade	**Type**	Roland CAMM-1 series blade
	Offset	0.000 to 1.500 mm (0.0 to 59.1 mil)
Software resolution (when cutting)		0.025 mm/step (0.98 mil/step)
Distance accuracy (when printing) (*4) (*5)		Error of less than ±0.3% of distance traveled or ±0.3 mm (±11.8 mil), whichever is greater
Distance accuracy (when cutting) (*4)		Error of less than ±0.4% of distance traveled or ±0.3 mm (±11.8 mil), whichever is greater When distance correction has been performed (when the setting for [CUTTING MENU] - [CALIBRATION] has been made): Error of less than ±0.2% of distance traveled or ±0.1 mm (±3.9 mil), whichever is greater
Repeatability (when cutting) (*4) (*6)		±0.1 mm (±3.9 mil) or less
Alignment accuracy for printing and cutting (*4) (*7)		±0.5 mm (±19.7 mil) or less
Alignment accuracy for printing and cutting when reloading media (*4) (*8)		Error of less than ±0.5% of distance traveled, or ±3 mm (±0.2 in.), whichever is greater
Connectivity		Ethernet (10BASE-T/100BASE-TX, automatic switching)
Power-saving function		Automatic sleep feature
Power requirements		AC 100 to 240 V ± 10%, 3.0 A, 50/60 Hz
Power consumption	**During operation**	Approx. 270 W
	Sleep mode	40 W
Acoustic noise level	**During operation**	63 dB (A) or less
	During standby	53 dB (A) or less
Dimensions (with stand)		1,934 (W) × 795 (D) × 1,303 (H) mm (76.1 [W] × 31.3 [D] × 51.3 [H] in.)
Weight (with stand)		119 kg (262.4 lb.)
Environment	**During operation (*9)**	Temperature: 15 to 32°C (59 to 90°F), humidity: 20 to 80%RH (no condensation)
	Not operating	Temperature: 5 to 40°C (41 to 104°F), humidity: 20 to 80%RH (no condensation)

	LEC2-300
Included items	Dedicated stand, power cord, blade, blade holder, media clamps, media holders, replacement blade for separating knife, cleaning liquid, drain bottle, User's Manual, etc.

*1 The media holders of this machine are designed to be used exclusively with media that has a paper tube (core) with an inner diameter of 3 inches. To use 2-inch media, the optional media flanges are required.

*2 The length of printing or cutting is subject to the limitations of the program.

*3
- 500 gf is the maximum instantaneous blade force.
- The blade force must be adjusted according to details such as the media thickness.

*4
- Media type: Media specified by Roland DG Corporation
- Temperature: 25°C (77°F), humidity: 50%RH
- Roll media must be loaded correctly.
- Applicable when all pinch rollers that can be used with the media width are used
- Side margins: 25 mm (1.0 in.) or more for both the left and right margins
- Excluding expansion/contraction of the media
- Assumes all correction and adjustment functions of the machine have been used properly

*5
- Print travel: 1 m (39.4 in.)

*6
- [PREFEED] menu item must be set to "ENABLE."

Range for assured repetition accuracy
- For media with a width exceeding 610 mm (24.0 in.): Length: 4,000 mm (157.5 in.)
- For media with a width of 610 mm (24.0 in.) or less: Length: 8,000 mm (315.0 in.)

*7
- Provided that the media feed length is 3,000 mm (118.1 in.) or less
- Excludes the effects of slanted movement and of expansion and contraction of the media

*8
- Data size:

1,000 mm (39.4 in.) in the media-feed direction, 736 mm (29 in.) in the carriage-movement direction
- No lamination
- Automatic detection of crop marks at four points when media is reloaded
- During cutting, [PREFEED] menu item must be set to "ENABLE."
- Excluding possible shift caused by expansion/contraction of the media and/or by reloading the media
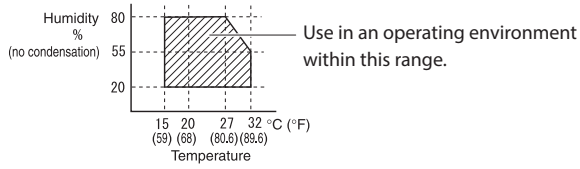
*9
- Operating environment