VersaUV

Roland

LEF-20

First Step Guide

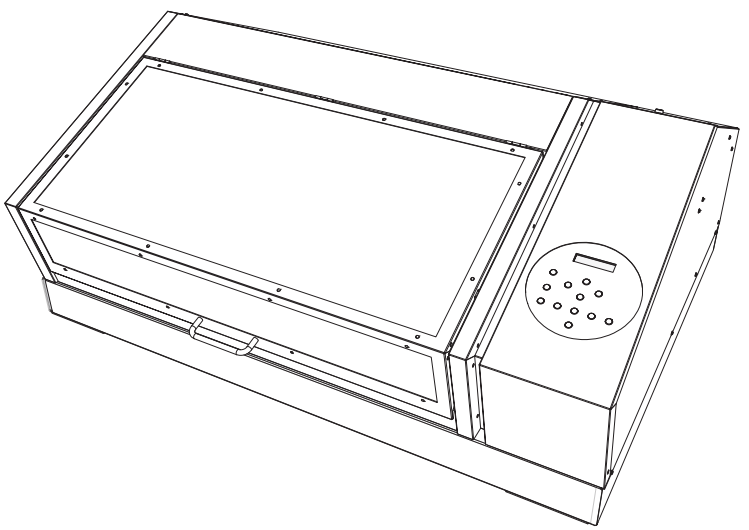

Thank you very much for purchasing this product.

- To ensure correct and safe usage with a full understanding of this product's performance, please be sure to read through this manual completely and store it in a safe location.
- Unauthorized copying or transferal, in whole or in part, of this manual is prohibited.
- The specifications of this product and the contents of this manual are subject to change without notice.
- The manual and the product have been prepared and tested as much as possible. If you find any misprints or errors, please inform us.
- Roland DG Corp. assumes no responsibility for any direct or indirect loss or damage that may occur through use of this product, regardless of any failure to perform on the part of this product.
- Roland DG Corp. assumes no responsibility for any direct or indirect loss or damage that may occur with respect to any article made using this product.

Roland DG Corporation

For the USA

FEDERAL COMMUNICATIONS COMMISSION RADIO FREQUENCY INTERFERENCE STATEMENT

NOTE: This equipment has been tested and found to comply with the limits for a Class A digital device, pursuant to Part 15 of the FCC Rules.

These limits are designed to provide reasonable protection against harmful interference when the equipment is operated in a commercial environment.

This equipment generates, uses, and can radiate radio frequency energy and, if not installed and used in accordance with the instruction manual, may cause harmful interference to radio communications.

Operation of this equipment in a residential area is likely to cause harmful interference in which case the user will be required to correct the interference at his own expense.

Unauthorized changes or modification to this system can void the users authority to operate this equipment.

Use only I/O cables that have been designed and manufactured specifically for this device.

For Canada

CAN ICES-3 (A)/NMB-3(A)

For California

WARNING

This product contains chemicals known to cause cancer, birth defects and other reproductive harm.

For EU Countries

WARNING

This is a Class A product. In a domestic environment this product may cause radio interference in which case the user may be required to take adequate measures.

For EU Countries

CE

Manufacturer:

ROLAND DG CORPORATION

1-6-4 Shinmiyakoda, Kita-ku, Hamamatsu-shi, Shizuoka-ken, 431-2103 JAPAN

The importer in the EU:

Roland DG EMEA, S.L.

Parc Tecnologic del Valles C/ Ceramistes, 6 08290 Cerdanyola del Valles / Barcelona Spain

NOTICE

Grounding Instructions

- In the event of a malfunction or breakdown, grounding provides a path of least resistance for electric current to reduce the risk of electric shock. This tool is equipped with an electric cord having an equipment-grounding conductor and a grounding plug. The plug must be plugged into a matching outlet that is properly installed and grounded in accordance with all local codes and ordinances.
- Do not modify the plug provided - if it will not fit the outlet, have the proper outlet installed by a qualified electrician.
- Improper connection of the equipment-grounding conductor can result in a risk of electric shock. The conductor with insulation having an outer surface that is green with or without yellow stripes is the equipment-grounding conductor. If repair or replacement of the electric cord or plug is necessary, do not connect the equipment-grounding conductor to a live terminal.
- Check with a qualified electrician or service personnel if the grounding instructions are not completely understood, or if in doubt as to whether the tool is properly grounded.
- Use only 3-wire extension cords that have 3-prong grounding plugs and 3-pole receptacles that accept the tool's plug.
- Repair or replace damaged or worn out cord immediately.

Operating Instructions

- KEEP WORK AREA CLEAN. Cluttered areas and benches invites accidents.
- DON'T USE IN DANGEROUS ENVIRONMENT. Don't use power tools in damp or wet locations, or expose them to rain. Keep work area well lighted.
- DISCONNECT TOOLS before servicing; when changing accessories, such as blades, bits, cutters, and like.
- REDUCE THE RISK OF UNINTENTIONAL STARTING. Make sure the switch is in off position before plugging in.
- USE RECOMMENDED ACCESSORIES. Consult the owner's manual for recommended accessories. The use of improper accessories may cause risk of injury to persons.
- NEVER LEAVE TOOL RUNNING UNATTENDED. TURN POWER OFF. Don't leave tool until it comes to a complete stop.

This system (including the housing and safety device) is a Class 1 laser product

Complies with IEC 60825-1 Edition 2.0 (2007-03).

Complies with FDA performance standards for laser products except for deviations pursuant to Laser notice No.50 dated June 24, 2007.

Caution - Use of controls or adjustments or performance of procedures other than those specified herein may result in radiation exposure.

Contents

Contents 1

Machine Highlights 2
- Documentation for This Machine. 2
- About Roland OnSupport. 2
- Features of This Machine. 3
- Features of ECO-UV Inks 3
- What You Can Do 4

To Ensure Safe Use 5

Pour utiliser en toute sécurité 11

Important Notes on Handling and Use 17
- Printer Unit. 17
- Ink cartridges 17

Part Names and Functions. 18
- Printer Unit. 18
  - Front 18
  - Rear 18
  - Operation Panel 19
  - Names and Functions of Operation Panel Keys 19
  - Display Screen 20

Prepare for Using This Printer. 21
- STEP 1: Checking the Included Items 21
- STEP 2: Deciding on an Installation Site. 22
  - Temperature and Humidity 23
  - Installation Space and Height 23
  - Air Ventilation 23
- STEP 3: Removing the Retainers. 24
- STEP 4: Attaching the Pad tray 25
- STEP 5: Connecting the Cables 26
- STEP 6: Making the Initial Settings. 27
- STEP 7: Filling with Ink for the First Time 28
  - Installing the Ink Cartridges 29
  - 1. Clean the Print Heads Using SOL INK Cleaning Cartridges. 29
  - 2. Insert the Ink Cartridges for the Respective Colors. 30
- STEP 8: Network Settings 31
  - Introduction. 31
  - Make the Network Settings for the Computer 32
  - Make the Network Settings on the Printer. . 33
  - Make the Port Settings for the RIP & PRINT MANAGEMENT SOFTWARE 35

First Time Printing 36
- Basic Operation Flow 36
- Conditions for Usable Media 37
- Printable Area 38
- STEP 1:Turning the Power On 38
- STEP 2:Loading Media and Setting the Height 39
  - 1. Loading Media (Media Setup) 39
  - 2. Setting the Height of the Media Automatically 40
- STEP 3: Printing Tests and Normal Cleaning. . 41
  - 1. Perform a Printing Test on Media for Testing 41
  - 2. Perform Normal Cleaning. 42
- STEP 4: Performing Actual Printing 43
  - 1. Perform "STEP 2:Loading Media and Setting the Height" (P. 39) 43
  - 2. Load the Print Area Set on This Machine into VersaWorks Dual 43
  - 3. Output Print Data Using VersaWorks Dual. 44
- STEP 5: Printing Tests and Normal Cleaning after Daily Operations 48
- STEP 6: Turning the Power Off. 48

Company names and product names are trademarks or registered trademarks of their respective holders.

http://www.rolanddg.com/

Copyright © 2013-2016 Roland DG Corporation

Machine Highlights

Documentation for This Machine

The following documentation is included with the machine.

LEF-20 First Step Guide (this document)

This document explains from how to set up the machine to printing for the first time. Be sure to read this first.

LEF-20 Master Guide

This document describes more detailed printing methods, as well as maintenance methods, troubleshooting, and more.

Roland VersaWorks Dual Installation Guide

This document describes how to install and set up the included RIP & PRINT MANAGEMENT SOFTWARE Roland VersaWorks Dual (hereinafter referred to as VersaWorks Dual) as well as the method of connection to the printer.

Special Color Ink Guide

This document describes the special methods of creating printing data and performing printing when using white ink or gloss ink.

About Roland OnSupport

Installing Roland OnSupport on your computer enables you to receive your printer's ink status and error information by email sent to your PC or mobile phone. You can also receive product updates and other support information from OnSupport.

To install OnSupport, download it from the following URL.

http://download.rolanddg.jp/en/bn_onsupport.html

Features of This Machine

This machine is provided with the following features.

Also supports printing on thick materials

This printer can print on a variety of materials from thin paper to thick materials. Using UV ink, this printer can print high-quality images on various types of media (the general name for the material to be printed on).

Head gap sensor

The height of the media placed on the table can be set automatically or manually. Then the table's height is automatically adjusted according to the height of the media so that high-quality images can be printed safely.

Specification of the print-start location and the printing area using an LED pointer

Using the LED pointer installed as a standard feature, you can easily and accurately specify the print-start location and the printing area. You can also verify the printing area before you carry out printing, which can help prevent failures when performing actual printing (preview feature).

Features of ECO-UV Inks

This printer uses ECO-UV inks. ECO-UV inks are fixed to the media instantly by ultraviolet light. This makes it possible to perform printing on media that is difficult to print on using conventional inks. ECO-UV inks are available in a lineup of six colors (cyan, magenta, yellow, back, white, and gloss).

What You Can Do

This section provides an overview of what you can do with this printer.

The illustrations below are just a few examples of items that can be printed with this printer.

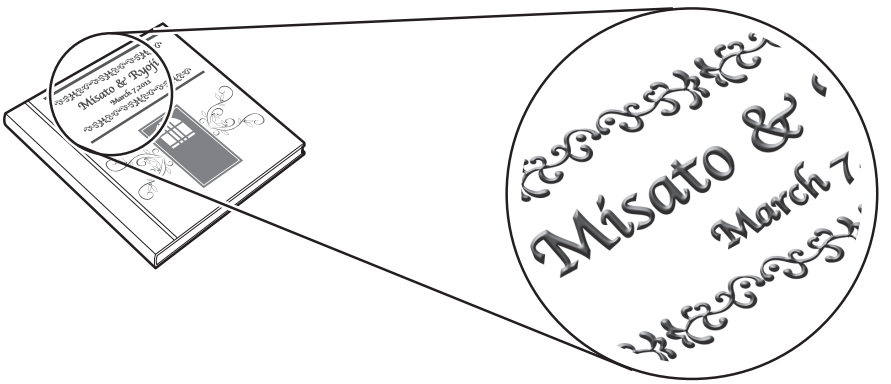

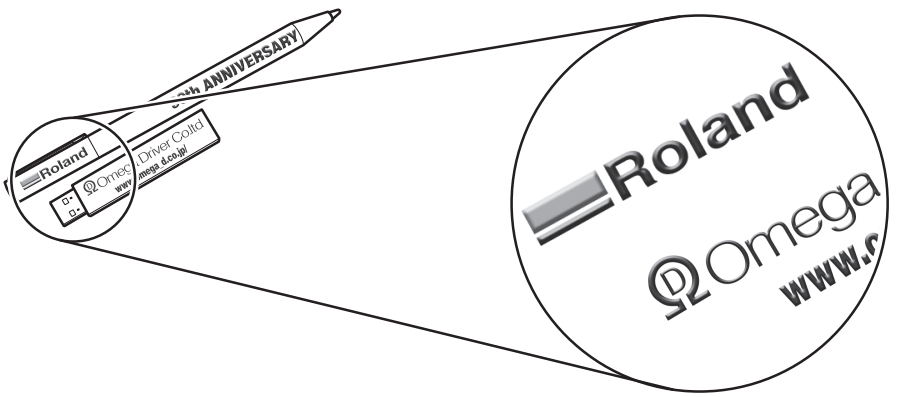

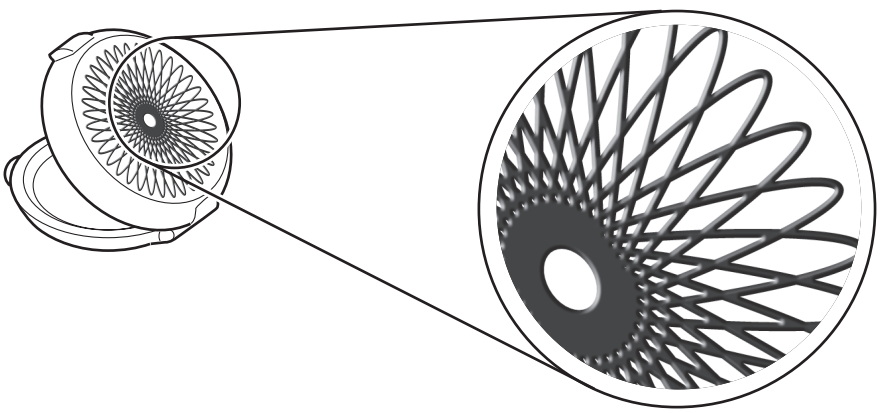

* There is a limit to the unevenness of the print surface. For details, see the "Master Guide."

To Ensure Safe Use

Improper handling or operation of this machine may result in injury or damage to property. Points which must be observed to prevent such injury or damage are described as follows.

About of ⚠WARNING and ⚠CAUTION Notices

⚠ **WARNING**	Used for instructions intended to alert the user to the risk of death or severe injury should the unit be used improperly.
⚠ **CAUTION**	Used for instructions intended to alert the user to the risk of injury or material damage should the unit be used improperly. * Material damage refers to damage or other adverse effects caused with respect to the home and all its furnishings as well as to domestic animals or pets.

About the Symbols

	The △ symbol alerts the user to important instructions or warnings. The specific meaning of the symbol is determined by the design contained within the △ symbol. The symbol at left means "danger of electrical shock."
	The ⃠ symbol alerts the user to items that must never be carried out (are forbidden). The specific meaning of the symbol is determined by the design contained within the ⃠ symbol. The symbol at left means the unit must never be disassembled.
	The ● symbol alerts the user to things that must be carried out. The specific meaning of the symbol is determined by the design contained within the ● symbol. The symbol at left means the power-cord plug must be unplugged from the outlet.

⚠ Incorrect operation may cause injury

⚠ WARNING

Be sure to follow the operation procedures described in this documentation. Never allow anyone unfamiliar with the usage or handling of the machine to touch it.

Incorrect usage or handling may lead to an accident.

Keep children away from the machine.

The machine includes areas and components that pose a hazard to children and may result in injury, blindness, choking, or some other serious accident.

Never operate the machine while tired or after ingesting alcohol or any medication.

Operation requires unimpaired judgment. Impaired judgment may result in an accident.

Never use the machine for any purpose for which it is not intended or use the machine in an undue manner that exceeds its capacity.

Doing so may result in injury or fire.

For included items (optional and consumable items, power cord, and the like), use only genuine items compatible with this machine.

Incompatible items may lead to an accident.

Before attempting cleaning, maintenance, or attachment or detachment of optional items, disconnect the power cord.

Attempting such operations while the machine is connected to a power source may result in injury or electrical shock.

Never attempt to disassemble, repair, or modify the machine.

Doing so may result in fire, electrical shock, or injury. Entrust repairs to a trained service technician.

⚠ CAUTION

Exercise caution to avoid being pinched by or becoming caught in the machine.

Inadvertently touching the machine can result in hands being pinched or becoming caught. Take care when operating the machine.

Never attempt operation while wearing a necktie, necklace, or loose clothing. Bind long hair securely.

Such items may become caught in the machine, resulting in injury.

Conduct operations in a clean, brightly lit location.

Working in a location that is dark or cluttered may lead to an accident, such as becoming caught in the machine as the result of an inadvertent stumble.

Never climb or lean on the machine.

The machine is not made to support a person. Climbing or leaning on the machine may dislodge components and cause them to fall out.

⚠ Danger of electrical short, electrical shock, or fire

⚠ WARNING

Connect the machine to an electrical outlet that complies with this machine's ratings (for voltage, frequency, and current).

Incorrect voltage or insufficient current may cause fire or electrical shock.

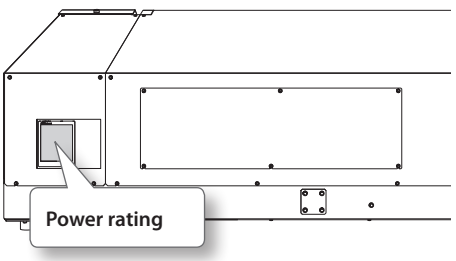

Never use this machine outside or in any location where exposure to water or high humidity may occur. Never touch the machine with wet hands.

Doing so may result in fire or electrical shock.

Never allow any foreign object to get inside the machine. Never expose to liquid spills.

Inserting objects such as coins or matches or allowing beverages to be spilled into the ventilation ports may result in fire or electrical shock. If anything gets inside, immediately disconnect the power cord and contact your authorized Roland DG Corp. dealer.

Never place any flammable object near the machine. Never use a combustible aerosol spray near the machine. Never use the machine in a location where gases can accumulate.

Combustion or explosion may occur.

Handle the power cord, plug, and electrical outlet correctly and with care. Never use any damaged articles.

Using a damaged item may result in fire or electrical shock.

⚠ WARNING

When using an extension cord or power strip, use one that adequately satisfies the machine's ratings (for voltage, frequency, and current).

Use of multiple electrical loads on a single electrical outlet or use of a lengthy extension cord may cause fire.

Connect the machine to ground.

This can prevent fire or electrical shock due to current leakage in the event of a malfunction.

Position the machine so that the power plug is within immediate reach at all times.

This is to enable quick disconnection of the power plug in the event of an emergency. Install the machine next to an electrical outlet. Also, provide enough empty space to allow immediate access to the electrical outlet.

If sparking, smoke, a burning odor, an unusual sound, or abnormal operation occurs, immediately unplug the power cord. Never use the machine if any component is damaged.

Continuing to use the machine may result in fire, electrical shock, or injury. Contact your authorized Roland DG Corp. dealer.

Do not use the supplied power cord with other products.

⚠ Important notes about the power cord, plug, and electrical outlet

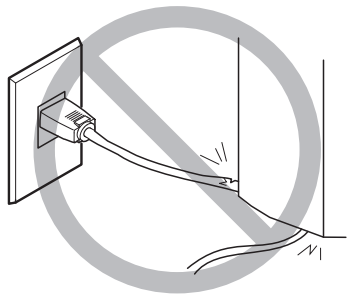

Never place any object on top of or subject the power cord to damage.

Never allow the power cord to get wet.

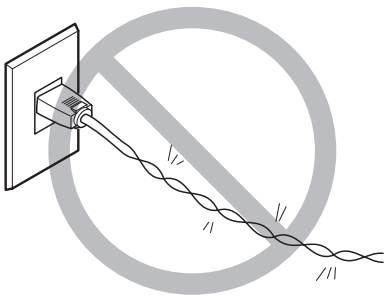

Never bend or twist the power cord with undue force.

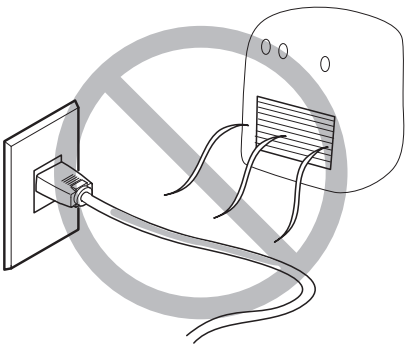

Never heat the power cord.

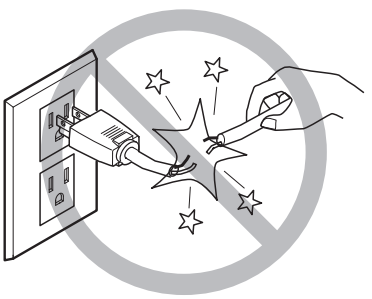

Never pull the power cord with undue force.

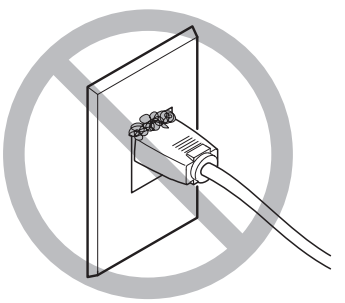

Dust may cause fire.

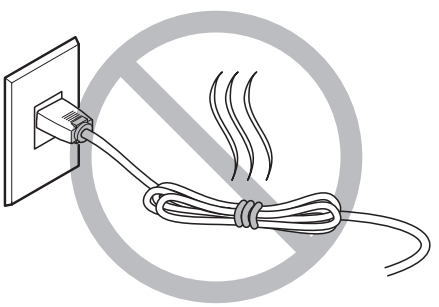

Never bundle, bind, or roll up the power cord.

⚠ Ink, cleaning fluid, and discharged fluid are flammable and toxic.

⚠ WARNING

Keep open flame away from the work area.

Ink and discharged fluid are flammable.

Never store ink, cleaning liquid, or discharged fluid in any of the following locations.

- Any location exposed to open flame
- Any location where high temperature may occur
- Near bleach or any other such oxidizing agent or explosive material
- Any location within the reach of children

Doing so may lead to a fire. Accidental ingestion by children may pose a health hazard.

Never place an ink cartridge in fire.

Ink may flow out, catch fire, and spread fire to other nearby objects.

⚠ WARNING

Never drink or sniff ink, cleaning fluid, or discharged fluid, or allow them to come in contact with the eyes or skin.

Doing so may be hazardous to your health.

⚠ CAUTION

Ensure adequate ventilation for the work area.

Failing to perform ventilation may result in a health hazard or danger of combustion due to ink fumes.

Never subject ink cartridges to impacts or attempt to disassemble them.

Ink may leak.

⚠ In the event of ingestion or physical distress

- In the event of contact with the eyes, immediately flush with water for at least 15 minutes. If eye irritation continues, seek treatment by a physician.
- In the event of contact with skin, immediately wash with soap. If irritation or inflammation occurs, seek treatment by a physician.
- In the event of ingestion, do not induce vomiting. Immediately seek treatment by a physician. Forcibly inducing vomiting may lead to choking.
- If odor leads to physical distress, move to a well-ventilated location and rest quietly. If dizziness or nausea persists, seek treatment by a physician.

* Refer to the safety data sheet (SDS) for information on the chemicals contained in the ink and their safety.

⚠ The total weight of this machine weighs 110 kg (242.5 lb.).

⚠ WARNING

Install the machine in a location that is level, stable, and able to bear the weight of the machine.

The total weight of the machine may reach 110 kg (242.5 lb.) or more. Installation in an unsuitable location may cause a major accident, including a tip over, fall, or collapse.

⚠ WARNING

Unloading and placement are operations that must be performed by 4 persons or more.

Tasks that require undue effort when performed by a small number of persons may result in physical injury. Dropping this machine may result in injury.

⚠ This machine uses ultraviolet light

⚠ CAUTION

Never look at the blue-white (ultraviolet) light emitted from the print-head area for an extended time.

Looking directly at the ultraviolet light from up close for an extended period may result in eye injury.

⚠ Caution: Ultraviolet Light

This machine is fitted with covers to keep external leakage of ultraviolet light at low levels, but incorrect handling or operation can lead to physical injury due to ultraviolet light. The extent of injury depends on the intensity and wavelength of the ultraviolet light and the length of time of exposure. Prolonged exposure to strong ultraviolet light of hazardous wavelengths can cause injury to the eyes or skin. Exercise caution.

⚠ Warning Labels

Warning labels are affixed to the machine to make areas of danger immediately clear. The meanings of these labels are as follows. Be sure to heed their warnings. Also, never remove the labels or allow them to become dirty.

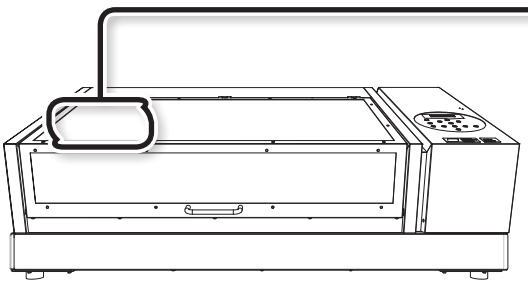

Caution: Ultraviolet Light

Never look directly at the ultraviolet light from up close for a prolonged period.

Caution: Pinching Hazard

Exercise caution to prevent fingers from being pinched when closing covers.

Flammable

Ink and discharged fluid are flammable. Keep away from open flame.

Ink Is Toxic

Ink and discharged fluid are toxic. Avoid contact with the body. Use only in a well-ventilated area.

Pour utiliser en toute sécurité

La manipulation ou l'utilisation inadéquates de cet appareil peuvent causer des blessures ou des dommages matériels. Les précautions à prendre pour prévenir les blessures ou les dommages sont décrites ci-dessous.

Avis sur les avertissements

⚠ ATTENTION	**Utilisé pour avertir l'utilisateur d'un risque de décès ou de blessure grave en cas de mauvaise utilisation de l'appareil.**
⚠ PRUDENCE	**Utilisé pour avertir l'utilisateur d'un risque de blessure ou de dommage matériel en cas de mauvaise utilisation de l'appareil.** * Par dommage matériel, il est entendu dommage ou tout autre effet indésirable sur la maison, tous les meubles et même les animaux domestiques.

À propos des symboles

	Le symbole △ attire l'attention de l'utilisateur sur les instructions importantes ou les avertissements. Le sens précis du symbole est déterminé par le dessin à l'intérieur du triangle. Le symbole à gauche signifie "danger d'électrocution."
	Le symbole ⃠ avertit l'utilisateur de ce qu'il ne doit pas faire, ce qui est interdit. La chose spécifique à ne pas faire est indiquée par le dessin à l'intérieur du cercle. Le symbole à gauche signifie que l'appareil ne doit jamais être démonté.
	Le symbole ● prévient l'utilisateur sur ce qu'il doit faire. La chose spécifique à faire est indiquée par le dessin à l'intérieur du cercle. Le symbole à gauche signifie que le fil électrique doit être débranché de la prise.

⚠ L'utilisation incorrecte peut causer des blessures

⚠ ATTENTION

S'assurer de suivre les procédures d'utilisation décrites dans la documentation. Ne jamais permettre à quiconque ne connaît pas le fonctionnement ou la manutention de l'appareil de le toucher.

L'utilisation ou la manutention incorrectes peuvent causer un accident.

Garder les enfants loin de l'appareil.

L'appareil comporte des zones et des composants qui présentent un danger pour les enfants et qui pourraient causer des blessures, la cécité, la suffocation ou d'autres accidents graves.

Ne jamais faire fonctionner l'appareil après avoir consommé de l'alcool ou des médicaments, ou dans un état de fatigue.

L'utilisation de l'appareil exige un jugement sans faille. L'utilisation avec les facultés affaiblies pourrait entraîner un accident.

Ne jamais utiliser l'appareil à des fins autres que celles pour lesquelles il est conçu. Ne jamais l'utiliser de manière abusive ou d'une manière qui dépasse sa capacité.

Le non-respect de cette consigne peut causer des blessures ou un incendie.

Utiliser uniquement des accessoires d'origine (accessoires en option, articles consommables, câble d'alimentation et autres articles semblables), compatibles avec l'appareil.

Les articles incompatibles risquent de causer des accidents.

Débrancher le câble d'alimentation avant de procéder au nettoyage ou à l'entretien de l'appareil, et avant d'y fixer ou d'en retirer des accessoires en option.

Tenter ces opérations pendant que l'appareil est branché à une source d'alimentation peut causer des blessures ou un choc électrique.

⚠ ATTENTION

Ne jamais tenter de démonter, de réparer ou de modifier l'appareil.

Le non-respect de cette consigne risque de provoquer un incendie, un choc électrique ou des blessures. Confier les réparations à un technicien ayant la formation requise.

⚠ PRUDENCE

Faire preuve de prudence pour éviter l'écrasement ou le coincement.

La main ou les doigts peuvent être écrasés ou coincés s'ils entrent en contact avec certaines surfaces par inadvertance. Faire preuve de prudence pendant l'utilisation de l'appareil.

Ne jamais faire fonctionner l'appareil si on porte une cravate, un collier ou des vêtements amples. Bien attacher les cheveux longs.

Ces vêtements ou ces objets peuvent être coincés dans l'appareil, ce qui causerait des blessures.

Utiliser l'appareil dans un endroit propre et bien éclairé.

Travailler dans un endroit sombre ou encombré peut causer un accident; l'utilisateur risque, par exemple, de trébucher malencontreusement et d'être coincé par une partie de l'appareil.

Ne jamais grimper ni s'appuyer sur la machine.

La machine n'est pas conçue pour supporter le poids d'une personne. Grimper ou s'appuyer sur la machine peut déplacer des éléments et causer un faux pas ou une chute, ce qui causerait des blessures.

⚠ Risque de décharge ou de choc électrique, d'électrocution ou d'incendie

⚠ ATTENTION

Brancher à une prise électrique conforme aux caractéristiques de cet appareil (tension, fréquence et courant).

Une tension incorrecte ou un courant insuffisant peuvent causer un incendie ou un choc électrique.

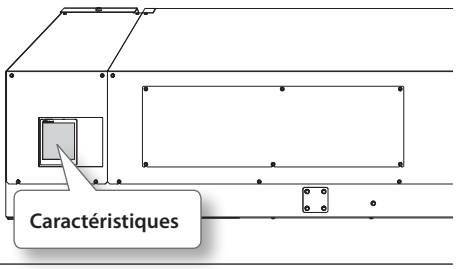

Ne jamais utiliser à l'extérieur ni à un endroit où l'appareil risque d'être exposé à de l'eau ou à une humidité élevée. Ne jamais toucher l'appareil avec des mains mouillées.

Le non-respect de cette consigne risque de provoquer un incendie ou un choc électrique.

Ne jamais insérer d'objet étranger dans l'appareil. Ne jamais exposer l'appareil aux déversements de liquides.

L'insertion d'objets comme des pièces de monnaie ou des allumettes, ou le déversement de liquides dans les orifices de ventilation peuvent causer un incendie ou un choc électrique. Si un objet ou du liquide s'infiltre dans l'appareil, débrancher immédiatement le câble d'alimentation et communiquer avec le représentant Roland DG Corp. autorisé.

Ne jamais placer d'objet inflammable à proximité de l'appareil. Ne jamais utiliser de produit inflammable en aérosol à proximité de l'appareil. Ne jamais utiliser l'appareil dans un endroit où des gaz peuvent s'accumuler.

Une combustion ou une explosion pourraient se produire.

⚠ ATTENTION

Manipuler le câble d'alimentation, la fiche et la prise électrique correctement et avec soin.

Ne jamais utiliser un article endommagé, car cela pourrait causer un incendie ou un choc électrique.

Si une rallonge ou une bande d'alimentation électrique sont utilisées, s'assurer qu'elles correspondent aux caractéristiques de l'appareil (tension, fréquence et courant).

L'utilisation de plusieurs charges électriques sur une prise unique ou une longue rallonge peut causer un incendie.

Mise à la terre.

La mise à la terre peut prévenir un incendie ou un choc électrique dus à une fuite de courant en cas de défaillance.

Placer l'appareil de façon à ce que la fiche soit facile d'accès en tout temps.

Ainsi, l'appareil pourra être débranché rapidement en cas d'urgence. Installer l'appareil près d'une prise électrique. En outre, prévoir suffisamment d'espace pour que la prise électrique soit facile d'accès.

S'il se produit des étincelles, de la fumée, une odeur de brûlé, un bruit inhabituel ou un fonctionnement anormal, débrancher immédiatement le câble d'alimentation. Ne jamais utiliser si un composant est endommagé.

Continuer à utiliser l'appareil peut causer un incendie, un choc électrique ou des blessures. Communiquer avec le représentant Roland DG Corp. Autorisé.

Ne pas utiliser le cordon électrique fourni avec d'autres produits.

⚠ Remarques importantes à propos du câble d'alimentation, de la fiche et de la prise électrique

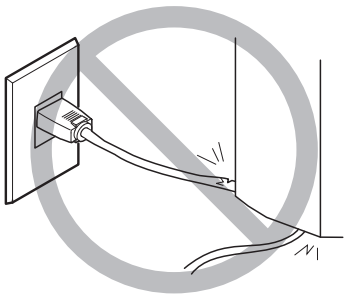

Ne jamais déposer aucun objet sur le câble, sur la fiche ou sur la prise car cela risque de les endommager.

Ne jamais laisser l'eau toucher le câble, la fiche ou la prise.

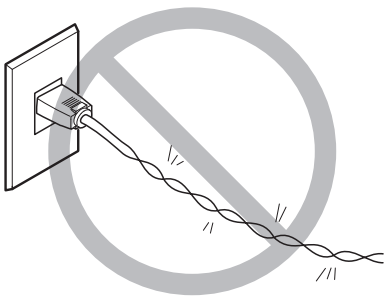

Ne jamais plier ni tordre le câble avec une force excessive.

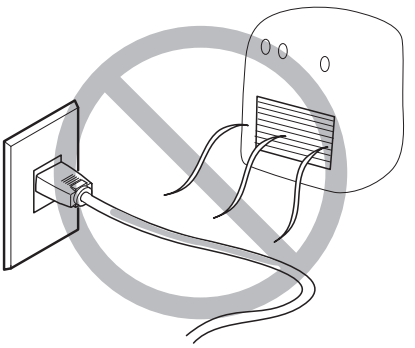

Ne jamais chauffer le câble, la fiche ou la prise.

Ne jamais tirer sur le câble ou la fiche avec une force excessive.

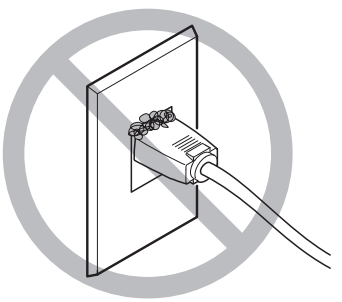

La poussière peut causer un incendie.

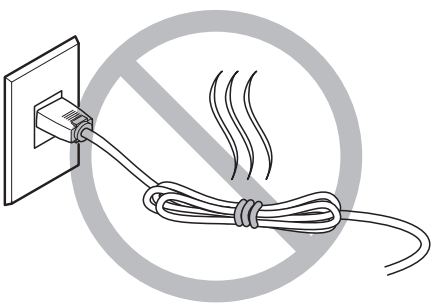

Ne jamais plier ni enrouler le câble.

⚠ L'encre, les liquides nettoyants et les liquides usées sont inflammables et toxiques

⚠ ATTENTION

Ne pas approcher une flamme nue de l'espace de travail.

L'encre et les liquides usés sont inflammables.

Ne jamais entreposer d'encre, de liquide de nettoyage ou des liquides usés dans les endroits suivants :

- un endroit exposé à une flamme nue;
- un endroit où il y a risque de température élevée;
- près d'eau de Javel, d'un autre agent d'oxydation ou de matériel explosif;
- tout endroit à la portée d'enfants.

Il y a risque d'incendie. L'ingestion accidentelle par un enfant peut présenter un risque pour la santé.

Ne jamais incinérer une cartouche d'encre.

De l'encre pourrait couler, s'enflammer et le feu se répandre à des objets proches.

⚠ ATTENTION

Ne jamais boire l'encre, le liquide de nettoyage ni les liquides usés, ne pas en respirer les vapeurs et ne pas laisser les produits entrer en contact avec les yeux ou la peau.

Cela est dangereux pour la santé.

⚠ PRUDENCE

S'assurer que le lieu de travail est bien aéré.

L'absence d'aération adéquate peut créer une situation dangereuse pour la santé ou un risque de combustion à cause des vapeurs qui émanent de l'encre.

Ne jamais soumettre une cartouche d'encre à des chocs. Ne jamais tenter d'ouvrir une cartouche d'encre.

De l'encre pourrait s'échapper.

⚠ En cas d'ingestion ou de trouble physique

- En cas de contact avec les yeux : rincer immédiatement et abondamment à l'eau courante pendant au moins 15 minutes. Si les yeux sont toujours irrités, consulter un médecin.
- En cas de contact avec la peau : laver immédiatement à l'eau et au savon. En cas d'irritation ou d'inflammation de la peau : consulter un médecin.
- En cas d'ingestion : ne pas provoquer le vomissement et demander immédiatement l'aide d'un médecin. Provoquer le vomissement peut créer un risque de suffocation.
- Si l'odeur cause un trouble physique, amener la personne dans un endroit bien aéré et la faire se reposer. Si l'étourdissement ou la nausée persistent, consulter un médecin.

⚠ Le poids total de l'appareil est de 110 kg (242.5 lbs)

⚠ ATTENTION

Installer l'appareil à un endroit stable et plat et capable de supporter son poids.

Le poids total de l'appareil peut être d'au moins 110 kg (242.5 lbs). Installer l'appareil à un endroit inapproprié peut provoquer un accident grave comme le renversement, la chute ou l'écrasement.

⚠ ATTENTION

Le déchargement et la mise en place doivent être faits par au moins quatre personnes.

Les tâches qui exigent un effort trop grand si elles sont exécutées par un petit nombre de personnes peuvent être cause de blessures. La chute d'articles très lourds peut aussi causer des blessures.

⚠ Cet appareil utilise des rayons ultraviolets.

⚠ PRUDENCE

Ne jamais regarder pendant de longues périodes le rayonnement blanc bleuté (ultraviolet) émis par la tête d'impression.

Le fait de regarder directement et de près le rayonnement ultraviolet pendant une période prolongée peut causer des lésions oculaires.

⚠ Attention : Rayonnement ultraviolet

Cet appareil est muni de couvercles destinés à empêcher les fuites de rayonnement ultraviolet à faible niveau, mais sa manipulation ou son utilisation incorrectes peuvent causer des lésions dues au rayonnement ultraviolet. La gravité des lésions est fonction de l'intensité et de la longueur d'onde du rayonnement ultraviolet et de la durée de l'exposition. L'exposition prolongée à un fort rayonnement ultraviolet de longueur d'onde dangereuse peut causer des lésions oculaires ou cutanées. La prudence est de rigueur.

⚠ Vignettes d'avertissement

Des vignettes d'avertissement sont apposées pour qu'il soit facile de repérer les zones dangereuses.
La signification des vignettes est donnée ci-dessous. Respecter les avertissements. Ne jamais retirer les vignettes et ne pas les laisser s'encrasser.

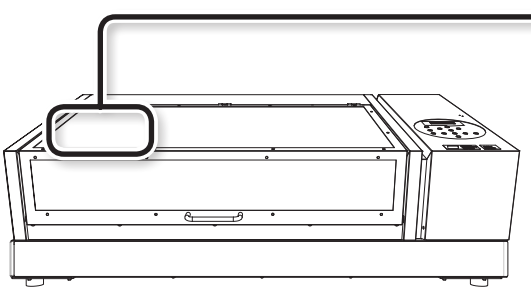

Attention : Rayonnement ultraviolet

Ne jamais regarder de près et directement pendant une période prolongée.

Attention : Risque de pincement

Faire attention de ne pas coincer les doigts pendant le chargement du support ou lors de la fermeture du couvercle.

Inflammable

L'encre et les liquides usés sont inflammables. Les garder loin de toute flamme nue.

L'encre est toxique

L'encre et les liquides usés sont toxiques. Éviter tout contact avec le corps. Utiliser uniquement dans un endroit bien aéré.

Important Notes on Handling and Use

This machine is a precision device. To ensure the full performance of this machine, be sure to observe the following important points. Failure to observe them may not only result in loss of performance but may also cause malfunction or breakdown.

Printer Unit

This machine is a precision device.

- Handle the machine carefully, and never subject it to impacts or excessive force.
- Never needlessly put your hand or fingers inside the cover, the ink-cartridge ports, or other internal areas of the machine.

Install the machine in a suitable location.

- Install the machine in a location having the specified temperature and relative humidity.
- Install the machine in a quiet, stable location offering good operating conditions.

Open and close the front cover gently.

- Be sure to hold the handle of the front cover and keep holding it until the cover is completely opened or closed. If you do not open and close the front cover gently, it may break or you may be injured.

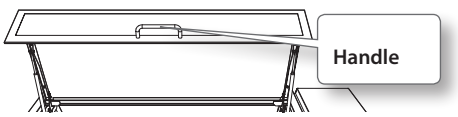

The print heads and the UV emitter are delicate devices.

- Never needlessly touch or allow media to scrape them. Failure to handle the print heads with care may cause damage.
- The print heads may be damaged if allowed to dry out. The machine prevents desiccation automatically, but improper operation may render this feature inoperative. Operate the machine properly, as specified in this manual.
- Never leave the machine with an ink cartridge removed. The remaining ink in the printer may harden and clog the print heads.
- The print heads are components that wear out. Periodic replacement is required, with the frequency of replacement depending on use.

Ink cartridges

Ink cartridges come in various types.

- Use a type that is compatible with the printer. Also, be sure to use only genuine items from Roland DG Corp.

Never subject ink cartridges to impacts or attempt to disassemble them.

- Never drop the ink cartridges or shake them forcefully. The impact may rupture the internal pouches and cause the ink to leak.
- Never attempt to disassemble the ink cartridges.
- Never attempt to refill the ink.
- If ink gets on your hands or clothing, wash it off as soon as possible. Removal may become difficult if you leave such adhered ink untreated.

Storage

- Use up the ink before the expiration date printed on the ink cartridge.
- Store the ink cartridge in a location that is not subject to direct sunlight or strong illumination.
- Store the ink cartridges unopened in a well-ventilated location at a temperature of 5°C (41°F) or higher and less than 35°C (95°F) and a relative humidity of 20 to 80%RH.

Part Names and Functions

Printer Unit

Front

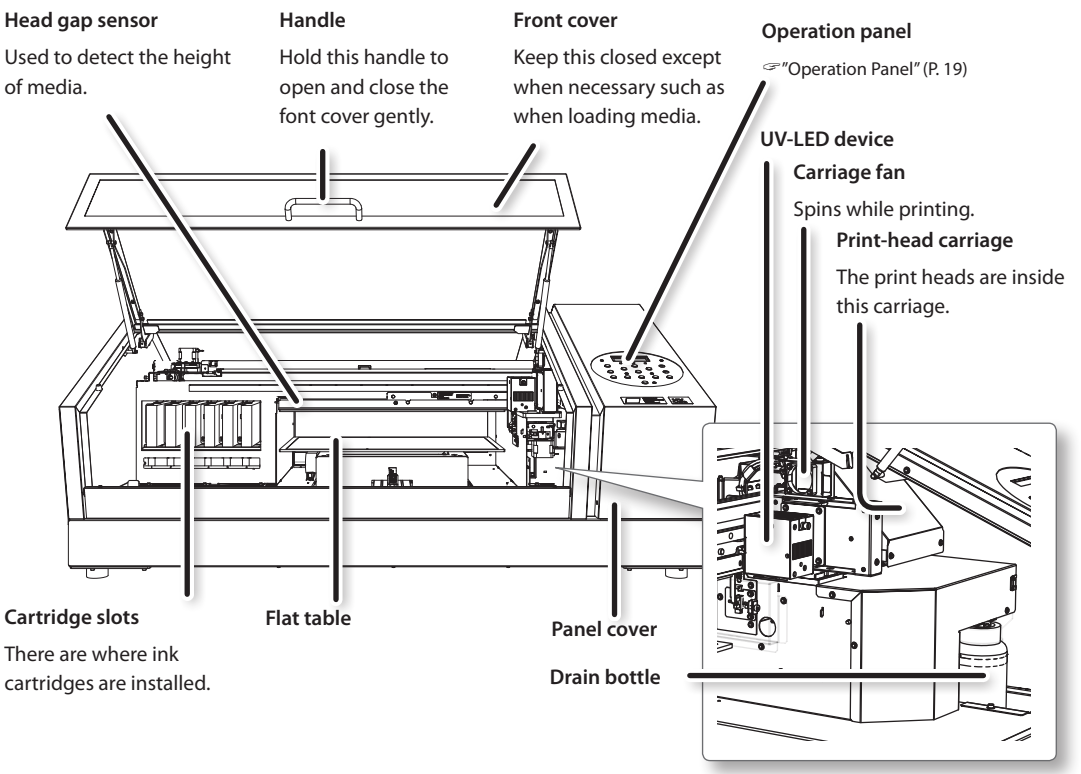

Rear

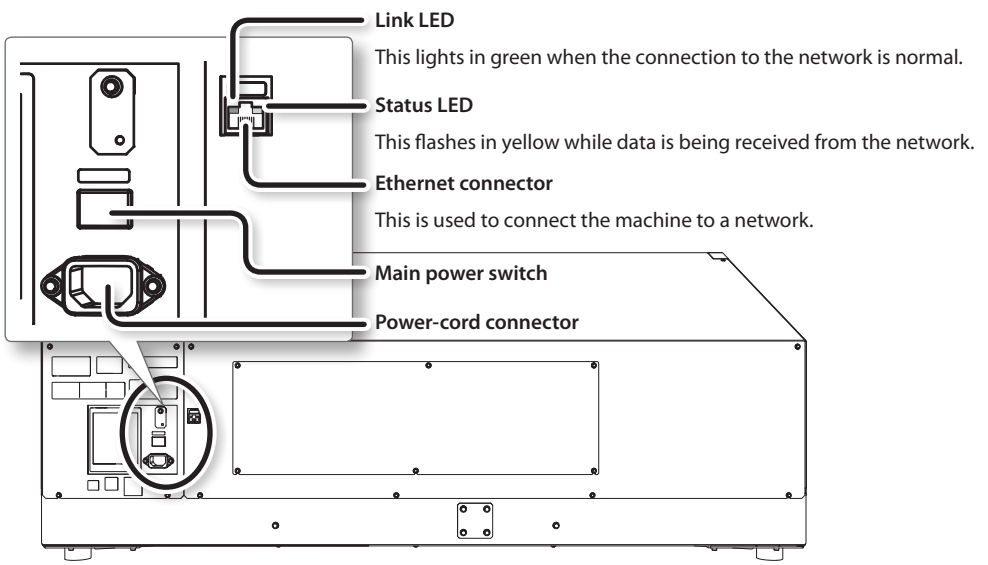

Operation Panel

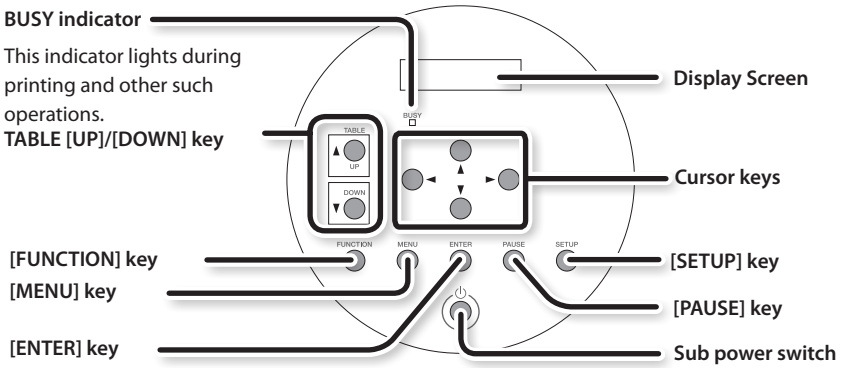

Names and Functions of Operation Panel Keys

In this document, the keys on the operation panel are indicated as shown below.

Key	Name	Function explanation
[MENU]	MENU key	Displays the main menu screen.
[SETUP]	SETUP key	Displays the setup screen.
[ENTER]	ENTER key	Sets the selected setting and executes processing.
[▲] [▼] [◄] [►]	Cursor keys	These are used for menu settings. They are also used for position adjustment when setting up the media. • [▲] and [▼] are used to move the flat table to the front and rear. • [◄] and [►] are used to move the print-head carriage.
[UP]	TABLE UP key	The flat table goes up.
[DOWN]	TABLE DOWN key	The flat table goes down.
[FUNCTION]	FUNCTION key	Displays the function menu screen.
[PAUSE]	PAUSE key	Pauses printing.

MEMO

When setting up the media, every time you press [▲], [▼], [◄], [►], [UP], or [DOWN], the flat table or print-head carriage moves by 0.1 mm (3.9 mil). If you hold down these keys, the flat table or print-head carriage moves continuously and quickly.

Display Screen

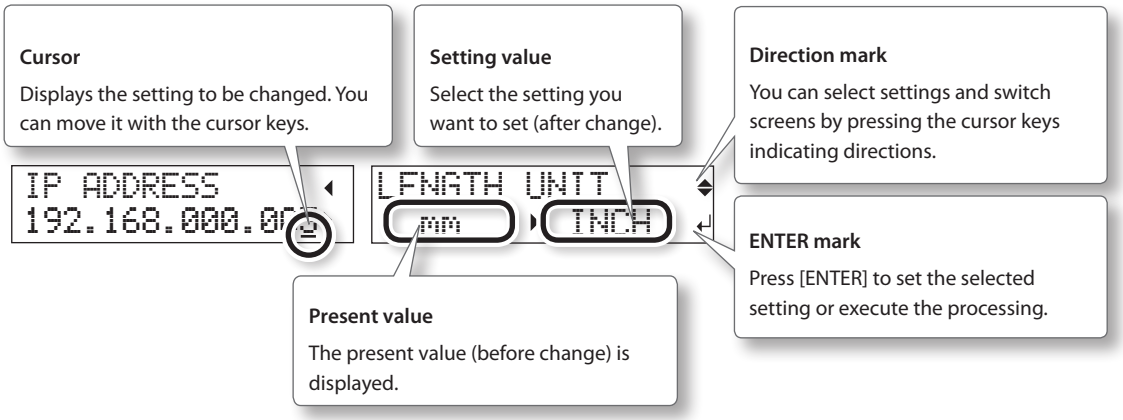

Prepare for Using This Printer

STEP 1: Checking the Included Items

The following items are included with the machine. Make sure they are all present and accounted for.

Power cord (1)	SOL INK cleaning cartridges (2)	Dummy cartridges (2)	Mist filters (2)
Cleaning sticks	Cleaning liquid (2)	Tweezers (1)	Wipers (6)
INKJET PRINTER MAINTENANCE GUIDE (1)	RIP & PRINT MANAGEMENT SOFTWARE (1)	First Step Guide (this document) (1)	Master Guide (1)
Special Color Ink Guide (1)	Hexagonal wrench (5 mm) (1)	Drain bottle (1)	Sponges (6)
Pad trays (2)			

STEP 2: Deciding on an Installation Site

Information is provided in "To Ensure Safe Use" (P. 5). Be sure to read this guide prior to installing or connecting the printer.

Install the machine in a quiet, stable location offering good operating conditions. An unsuitable location can cause accidents, fire, faulty operation, or breakdown.

⚠ WARNING

Ensure adequate ventilation for the work area.

Failing to perform ventilation may result in a health hazard or danger of combustion due to ink fumes.

Unsuitable installation sites

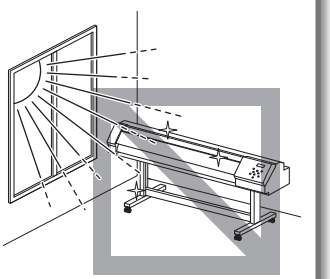

The following locations can cause malfunctions or poor printing quality.

- Locations subject to large fluctuations in temperature or humidity
- Locations subject to shaking or vibration
- Locations where the floor is tilted, not level, or unstable
- Dusty locations
- Locations exposed to direct sunlight
- Locations near air-conditioning or heating equipment
- Locations exposed to water or moving air
- Locations exposed to considerable electrical or magnetic noise or other forms of electromagnetic energy

MEMO

When you install the machine, check that all four rubber feet of the machine contact the ground.

If any of the rubber feet do not contact the ground, you can adjust their height by rotating them.

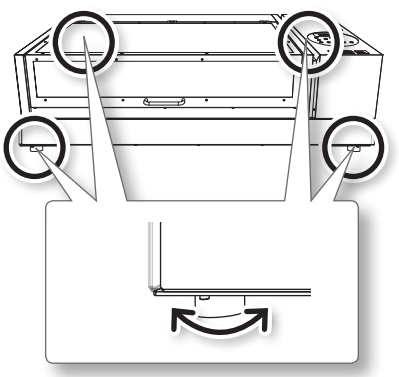

Temperature and Humidity

Maintain the specified temperature and humidity even when the machine is not in use. Not doing so may cause the machine to break down.

Status of This Machine	Temperature	Humidity
Power on	20 to 32°C (68 to 90°F)	35 to 80%RH (no condensation)
Not operating	5 to 40°C (41 to 104°F)	20 to 80%RH (no condensation)

Installation Space and Height

The space shown below is required in order to use the machine.

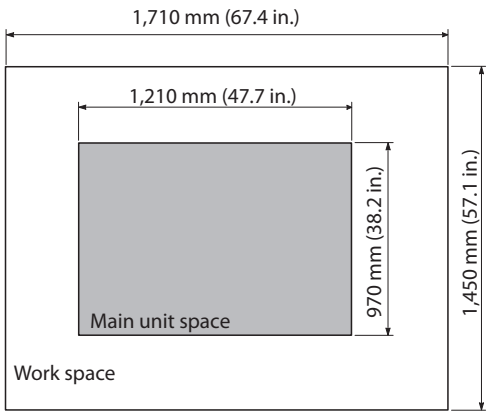

The installation location should be above the work floor by 0.6 m (23.6 in.) or more.

This machine is designed to be installed on a desktop. Install the machine in a location that allows easy access to areas such as the power switch and other controls during operation.

The total weight of this machine weighs 110 kg (242.5 lb.). Placement must be performed by 4 or more persons holding 4 corners of the machine.

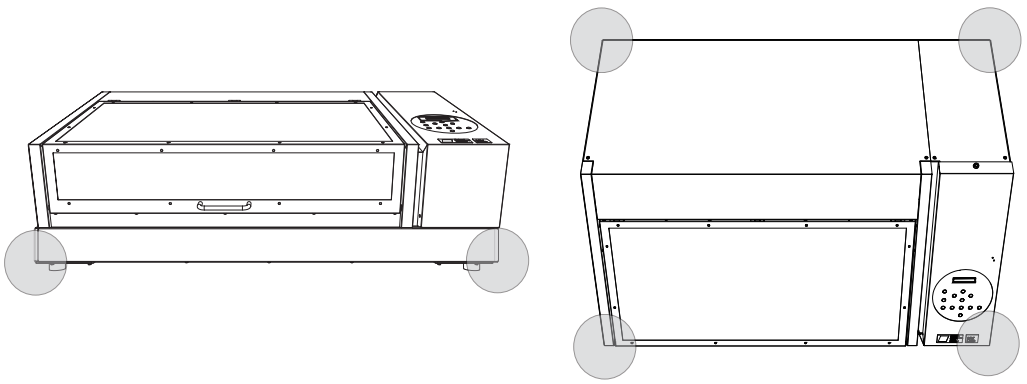

Air Ventilation

This machine emits a small amount of volatile compounds during printing and for some time after printing, which may cause irritation of your eyes, nose, and throat. To use this machine, make sure to install ventilating equipment to ensure adequate ventilation.

For installation of a ventilation machine, contact your authorized Roland DG Corp. dealer.

STEP 3: Removing the Retainers

Retainers are attached to the machine to protect it from vibration during transportation. When installation is complete, remove these retainers.

⚠ WARNING

This work must be performed before connecting the power cord.

If the power is turned on while this work is in progress, there is a risk of injury such as hands or fingers getting caught.

- Make sure to remove all the retainers. If any remain on the machine, faulty operation or breakdown may occur when the power is switched on.
- Store the retainers carefully because they are needed again when transporting the machine.
- For transportation of this machine, contact your authorized Roland DG Corp. dealer.

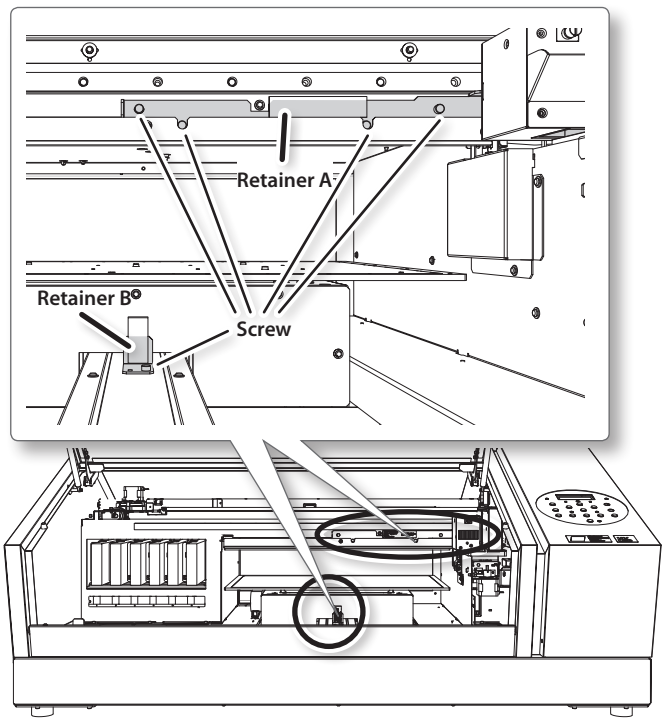

You can store the retainers in the locations indicated in the illustration. Use the screws previously attached to the retainers to attach them to the machine.

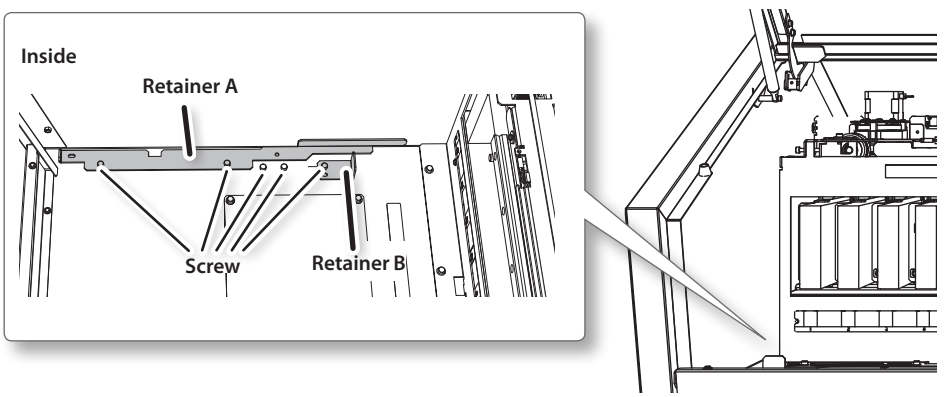

STEP 4: Attaching the Pad tray

The pad tray prevents discharged fluid from entering the machine when discharged fluid spills from the drain bottle.

MEMO

When the pad tray gets dirty, replace it with a spare pad tray (included) as needed.

1. Open the panel cover.

Remove the screw on the top of the panel cover, and then pull out the panel cover in the direction indicated by the arrow.

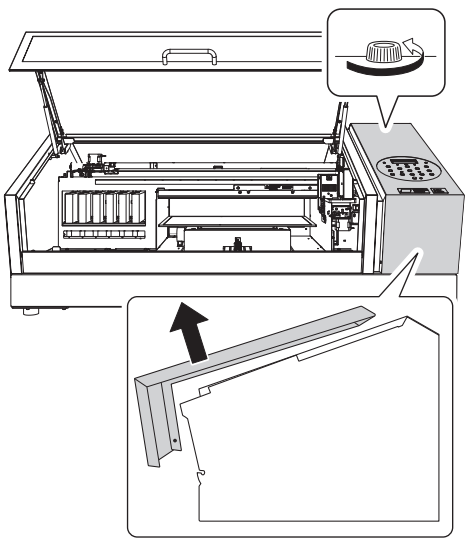

2. Detach the drain bottle.

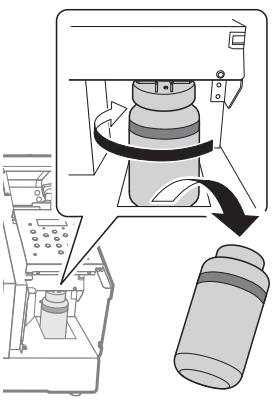

3. Place the pad tray on the place where the drain bottle was stored.

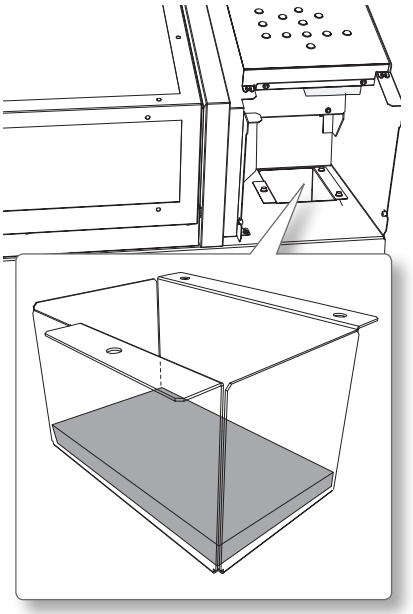

MEMO

Place the pad tray so that it is not creased or loose. If the pad tray is creased or loose, it will be difficult to install the drain bottle.

4. Place the drain bottle on the pad tray, and then install the drain bottle.

5. Close the panel cover.

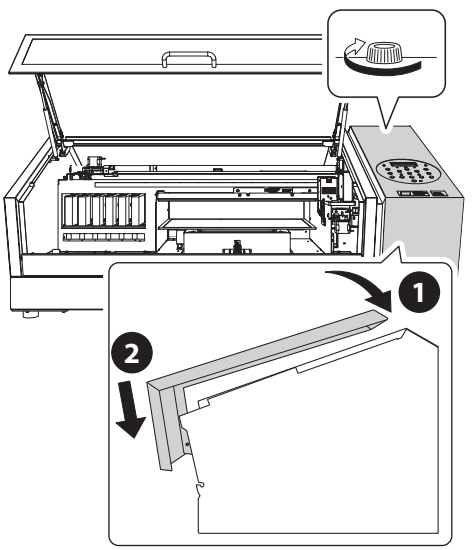

STEP 5: Connecting the Cables

⚠ WARNING **Perform this work with all power switches left switched off.**

Failure to do so may result in sudden movement of the machine, which may cause injury.

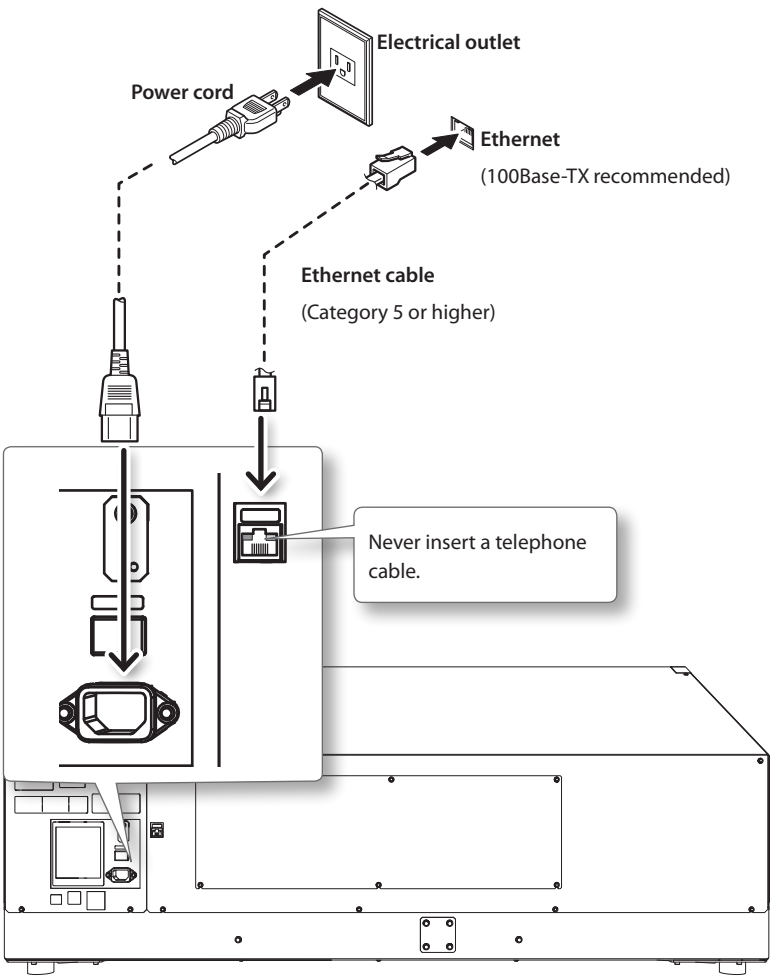

STEP 6: Making the Initial Settings

NOTE

Be sure to hold the handle of the front cover and open and close it gently.

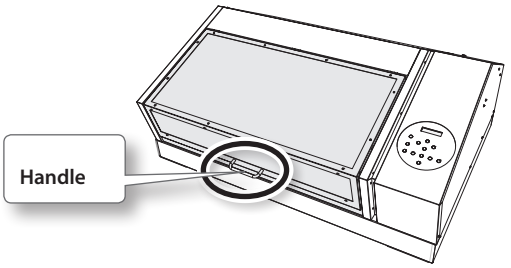

1. Close the front cover.

2. Switch on the main power.

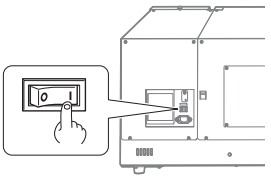

3. Hold down [MENU] and press the sub power switch.

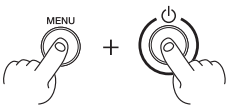

The screen shown below appears.

```
MENU LANGUAGE    ◆
JAPANESE         ↵
```

4. Press [▼] to select the language you want.

5. Press [ENTER].

The screen shown below appears.

```
LENGTH UNIT      ◆
  mm    ▶  INCH  ↵
```

6. Press [▲] or [▼] to select the measurement unit for length.

7. Press [ENTER].

The screen shown below appears.

```
TEMP. UNIT       ◆
  °C    ▶  °F    ↵
```

8. Press [▲] or [▼] to select the measurement unit for temperature.

9. Press [ENTER].

The screen shown below appears.

```
SELECT INK TYPE◆
ECO-UV CMYKG1W ↵
```

10. Press [▲] or [▼] to select the ink type.

Ink type	Ink cartridge to be used
ECO-UV CMYKGlW	**ECO-UV Ink cartridge** Cyan, magenta, yellow, black, gloss, white
ECO-UV CMYKWW	**ECO-UV Ink cartridge** Cyan, magenta, yellow, black, white, white
ECO-UV3 CMYKGlW	**ECO-UV3 Ink cartridge** Cyan, magenta, yellow, black, gloss, white
ECO-UV4 CMYKGlW	**ECO-UV4 Ink cartridge** Cyan, magenta, yellow, black, gloss, white
ECO-UV4 CMYKWW	**ECO-UV4 Ink cartridge** Cyan, magenta, yellow, black, white, white

11. **Press [ENTER].**

The screen shown below appears.

```
INSTALL
   DRAIN BOTTLE↵
```

Make sure that the drain bottle is installed properly.

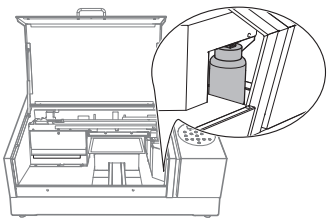

12. **Press [ENTER].**

STEP 7: Filling with Ink for the First Time

Firstly, clean the print heads with cleaning liquid when installing ink cartridges for the first time after shipment from the factory. After cleaning, fill the machine with the ink of each color.

The on-screen messages indicate which ink cartridges to insert and remove and when to insert and remove them.

Follow the instructions given in "1. Clean the Print Heads Using SOL INK Cleaning Cartridges" (P. 29) and "2. Insert the Ink Cartridges for the Respective Colors" (P. 30).

Prepare

- Two SOL INK cleaning cartridges
- The ink cartridges to be used

NOTE

- Be sure to use new SOL INK cleaning cartridges and ink cartridges.
- Never, under any circumstances, use anything other than the specified type of ink or cleaning liquid.

Installing the Ink Cartridges

NOTE

- Insert each color ink cartridge into the slot labeled with the matching color. Inserting an incorrect cartridge may lead to breakdowns. Therefore, exercise caution when inserting cartridges. If you insert an incorrect cartridge by mistake, contact your authorized Roland DG Corp. dealer.
- Be sure to insert cartridges horizontally. Otherwise, cleaning and filling may not be performed properly.

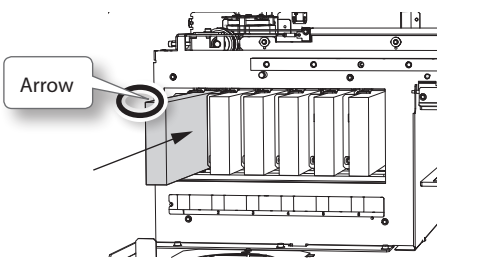

- Insert the cartridge so that the side with the arrow faces up.
- Insert and remove cartridges slowly, one at a time.

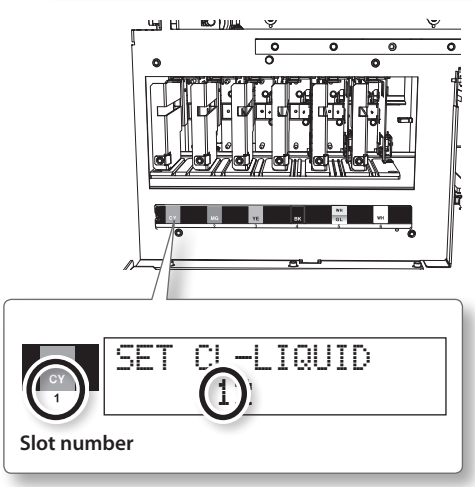

1. Clean the Print Heads Using SOL INK Cleaning Cartridges

1. Check that the following screen is displayed.

```
SET CL-LIQUID
     12
```

2. Insert SOL INK cleaning cartridges into the slots whose numbers are displayed.

Then, the screen shown below appears.

```
SET DUMMY CRT.
     SLOT 3,4  ↵
```

MEMO

The SOL INK cleaning cartridges are not differentiated by color.

3. Insert dummy cartridges into the slots whose numbers are displayed, and then press [ENTER].

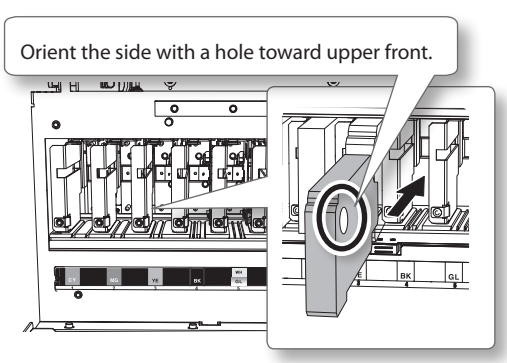

The screen shown below appears.

```
FILLING INK...
>
```

4. When the screen shown below appears, remove the SOL INK cleaning cartridges.

```
REMOVE CL-LIQUID
     12
```

Then, the screen shown below appears.

```
REMOVE DUMMY CRT
     SLOT 3,4  ↵
```

5. Remove the dummy cartridges, and then press [ENTER].

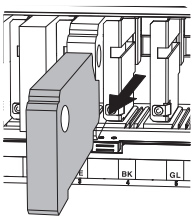

Then, the screen shown below appears.

```
SET CL-LIQUID
      34
```

6. Use the removed SOL INK cleaning cartridges to repeat steps 2 to 5.

Repeat until the screen shown below appears.

```
EMPTY
  DRAIN BOTTLE ↵
```

7. Discard the discharged fluid, and then reattach the drain bottle.

MEMO

For details on how to detach and attach the drain bottle, see steps 1, 2, 4, and 5 in the procedure in "STEP 4: Attaching the Pad tray" (P. 25).

8. Make sure the drain bottle is installed, and then press [ENTER].

Then, the screen shown below appears.

```
SET CARTRIDGE
     123456
```

Cleaning is finished.

2. Insert the Ink Cartridges for the Respective Colors

NOTE

Be sure to hold the handle of the front cover and open and close it gently.

1. Before inserting ink cartridges, shake each of them 50 times (about 15 seconds).

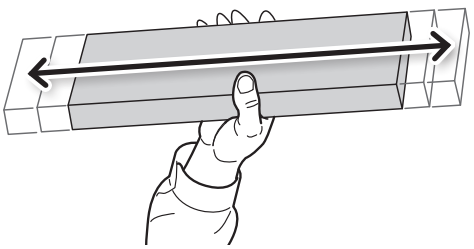

If ink components precipitate, it will not be possible to print with correct colors. So that the ink mixes well, shake the ink cartridge horizontally with a stroke length of around 5 cm (2 in.) from each end of the ink cartridge.

2. Insert the ink cartridge for each color.

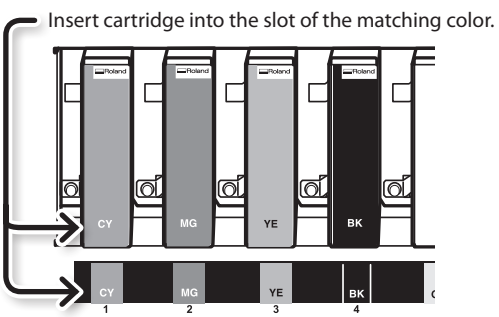

The screen shown below appears.

```
FILLING INK...
>
```

```
EMPTY
  DRAIN BOTTLE ↵
```

3. Discard the discharged fluid, and then reattach the drain bottle.

4. Make sure the drain bottle is installed, and then press [ENTER].

The machine is now filled with ink.

5. Close the front cover.

STEP 8: Network Settings

Introduction

Make sure the machine is connected to the network by an Ethernet cable.

The network settings on the machine must be made manually, using the operation panel. For information about how to make the settings, refer to "Make the Network Settings on the Printer" (P. 33) later in this step.

Also, to perform printing from this machine, the RIP & PRINT MANAGEMENT SOFTWARE included with the machine must be installed on the computer you are using. For information about installation, refer to the documentation for the RIP & PRINT MANAGEMENT SOFTWARE.

This machine has a built-in print server as a network interface. When you use the print server, you can send print data to the machine from anywhere on the network. TCP/IP is used as the protocol.

NOTE

The examples used in the procedures for making the settings described in this section assume you are using one computer and one machine. The procedures and setting values described here may not be suitable for all operating environments.

If the computer you are using is connected to a number of networked devices or to the Internet, incorrect settings may adversely affect the entire network. For detailed information about the settings, consult your network administrator.

Make the Network Settings for the Computer

Procedure

1. **Log on to Windows as the "Administrator" or a member of the "Administrators" group.**

2. **Display the [Local Area Connection Status] dialog box.**

Windows 10 users

2-1. From the [Start] menu, click [Settings], and then click [Network & Internet].

2-1. Click [Ethernet], and click [Network and Sharing Center].

2-1. Click [Ethernet] or [Wi-Fi].

Windows 8.1 users

2-1. From the [Start] menu, click [PC settings], and then click [Control Panel].

2-2. Click [Network and Internet], and then click [Network and Sharing Center].

2-3. Click [Ethernet] or [Wi-Fi].

Windows 7 users

2-1. From the [Start] menu, click [Control Panel].

2-2. Click [Network and Internet], and then click [Network and Sharing Center].

2-3. Click [Local Area Connection] or [Wireless Network Connection].

3. **Click [Properties].**

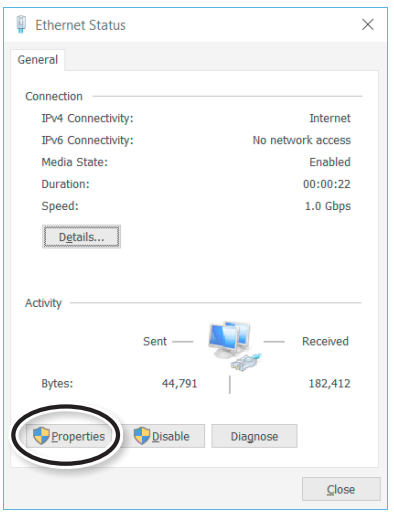

The [Ethernet Properties] dialog box appears. (On Windows 7, the [Local Area Connection Status] dialog box appears.)

If the [User Account Control] dialog box appears, click [Continue].

4. **Select [Internet Protocol Version 4 (TCP/IPv4)], and then click [Properties].**

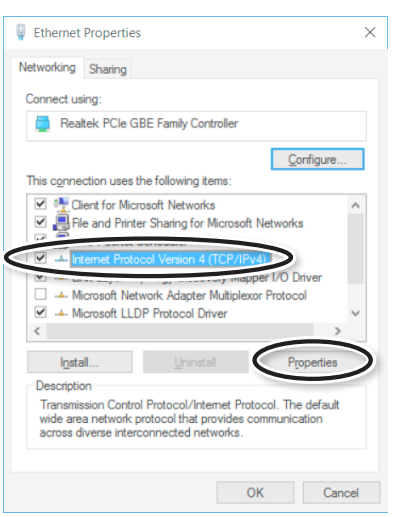

MEMO

If the [Internet Protocol] check box is clear, select it.

5. **Select [Use the following IP address].**

6. **Enter the information as shown below, then click [OK].**

Parameter	Address to enter
IP address	192.168.0.XXX
Subnet mask	255.255.255.0

Here, "XXX" can be any number from 001 to 254. However, be sure to specify a number that is different from the numbers used for other computers and devices. Here, as an example, enter "192.168.0.101" for the IP address and "255.255.255.0" for the subnet mask.

7. **Click [Close] in [Ethernet Properties] ([Local Area Connection Properties] on Windows 7), and then click [Close] in [Ethernet Status] ([Local Area Connection Status] on Windows 7).**

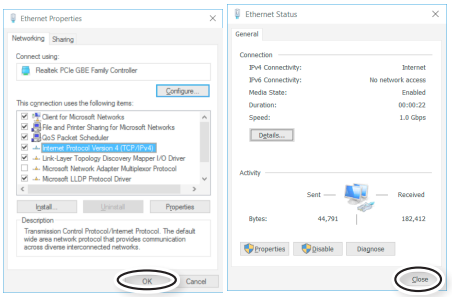

Make the Network Settings on the Printer

NOTE

The addresses used in this section are merely example settings. For detailed information about the settings, consult your network administrator.

1. Set the IP address.

1. **Press [MENU].**

2. **Press [▼] several times to display the screen shown below.**

```
MENU
SYSTEM INFO.
```

3. **Press [►], then [▲].**

The screen shown below appears.

```
SYSTEM INFO.
NETWORK
```

4. **Press [►] three times.**

The screen shown below appears.

```
IP ADDRESS
192.000.000.000
```

5. **Press [▲] or [▼] to select the address number.**

6. **Press [►].**

7. **Repeat steps 5 and 6 to set [IP ADDRESS] (192.168.000.XXX).**

Here, "XXX" can be any number from 001 to 254. However, be sure to specify a number that is different from the numbers used for other computers and devices.

For the part corresponding to "192.168.000," apply the same value as the setting of your computer.

Here, "192.168.000.003" is entered by way of example.

```
IP ADDRESS
192.168.000.003
```

8. **When you have finished making the setting, press [ENTER].**

9. **Press [◄].**

The screen shown below appears again.

```
NETWORK
IP ADDRESS
```

2. Set the subnet mask.

1. **On the screen of step 9 of "1. Set the IP address." (P. 33), press [▼].**

The screen shown below appears.

```
NETWORK
SUBNET MASK
```

2. **Press [►] twice.**

The screen shown below appears.

```
SUBNET MASK
000.000.000.000
```

3. **Press [▲] or [▼] to select the address number.**

4. **Press [►].**

5. **Repeat steps 3 and 4 to set the subnet mask (255.255.255.0).**

For the subnet mask, make the setting the same value as the one used by the computer. Here, "255.255.255.000" is entered by way of example.

```
SUBNET MASK
255.255.255.000
```

6. **When you have finished making the setting, press [ENTER].**

7. **Press [◄].**

The screen shown below appears again.

```
NETWORK
SUBNET MASK
```

If you connect the computer and the machine on a one-to-one basis, this completes the settings to make on the printer. Proceed to "Make the Port Settings for the RIP & PRINT MANAGEMENT SOFTWARE" (P. 35).

If you need to set the gateway address, proceed to the following procedure, "3. Set the gateway address." (P. 35).

3. Set the gateway address.

1. On the screen of step 7 of "2. Set the subnet mask." (P. 34), press [▼].

The screen shown below appears.

```
NETWORK
GATEWAY ADDR.
```

2. Press [►] twice.

The screen shown below appears.

```
GATEWAY ADDR.
000.000.000.000
```

3. Press [▲] or [▼] to select the address number.

4. Press [►].

5. Repeat steps 3 and 4 to set the gateway address (255.255.255.255).

For the value to enter for the gateway address, consult your network administrator. Here, "255.255.255.255" is entered by way of example.

```
GATEWAY ADDR.
255.255.255.255
```

6. When you have finished making the setting, press [ENTER].

7. Press [◄].

The screen shown below appears again.

```
NETWORK
GATEWAY ADDR.
```

Make the Port Settings for the RIP & PRINT MANAGEMENT SOFTWARE

- Install the RIP & PRINT MANAGEMENT SOFTWARE and set it up. For the print destination, use the IP address set on the printer. For information about how to make the settings, refer to the documentation for the RIP & PRINT MANAGEMENT SOFTWARE.
- You can check whether the connection to the network has been made by using the printing-test feature of the RIP & PRINT MANAGEMENT SOFTWARE. For information about how to carry out a printing test, refer to the documentation for the RIP & PRINT MANAGEMENT SOFTWARE.

First Time Printing

Basic Operation Flow

When Starting Daily Operations

1. "STEP 1:Turning the Power On" (P. 38)
2. "STEP 2:Loading Media and Setting the Height" (P. 39)
3. "STEP 3: Printing Tests and Normal Cleaning" (P. 41)

Actual Printing

4. Repeat steps 2 and 3.
5. "STEP 4: Performing Actual Printing" (P. 43)

After Daily Operations

6. "STEP 5: Printing Tests and Normal Cleaning after Daily Operations" (P. 48)
7. "STEP 6: Turning the Power Off" (P. 48)

Conditions for Usable Media

In this manual, the printing material used for output is called "media."

Media		Condition
Maximum size	Width	538 mm (21.2 in.)
	Length	360 mm (14.2 in.)
	Thickness	100 mm (3.94 in.)
Maximum weight		5 kg (11 lb.)

NOTE

- Do not use media that is charged with static electricity.
- This printer cannot print on all materials. When selecting media, be sure to carry out testing in advance to make sure that satisfactory print quality can be obtained.
- There is a limit to the variation in the unevenness on the print surface.

☞ "Height Settings When the Print Surface is Uneven" (Master Guide)

- Depending on the type of media and the installation method, the height may not be set correctly. The machine may malfunction if printing is performed under these conditions. Do not use the following types of media.

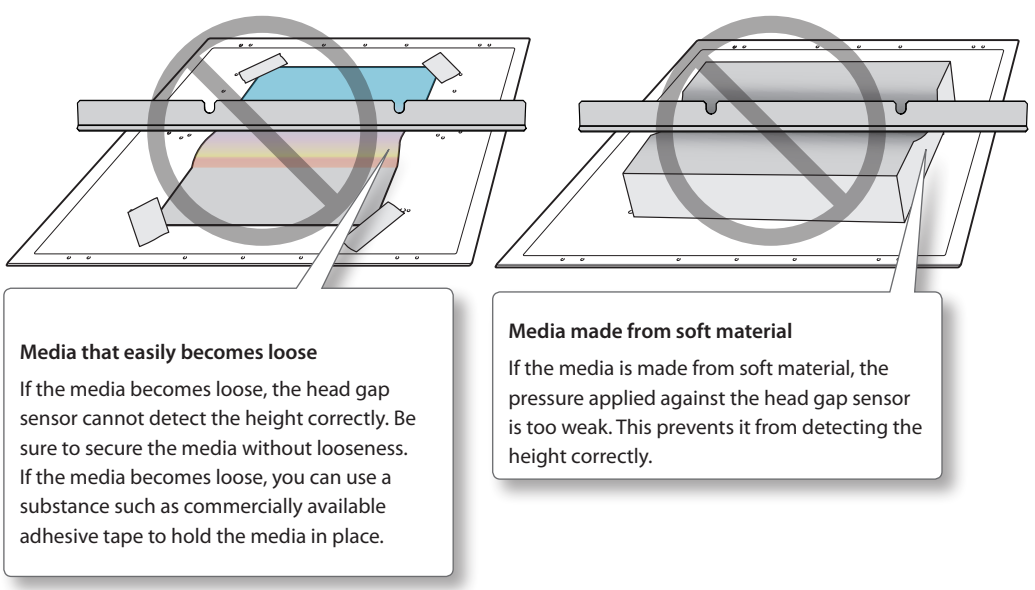

Printable Area

Maximum Printable Area: Width 508 × length 330 × thickness 100 mm (20 × 13 × 3.94 in.)

* The maximum printable area is inside the guide lines on the flat table.
* The maximum size of the media and the maximum printable area are different.

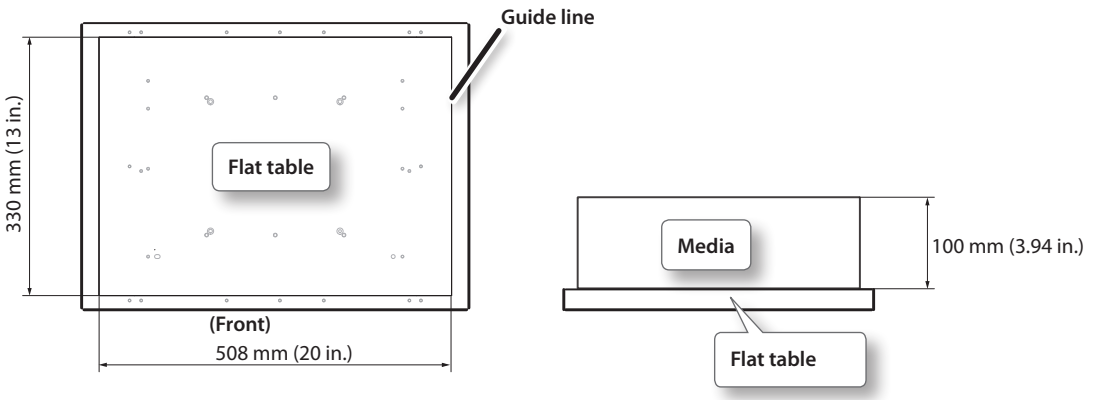

STEP 1:Turning the Power On

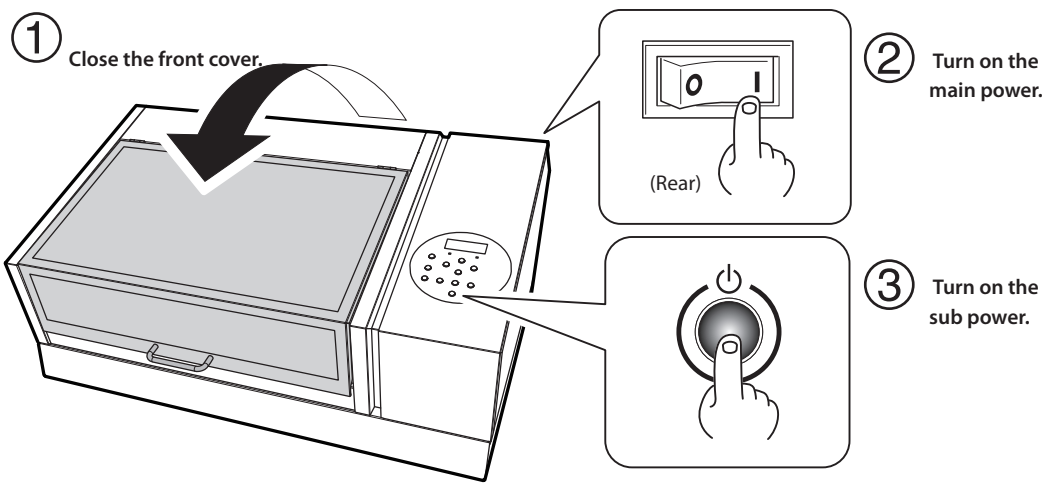

NOTE

Leave the main power switched on at all times.

Never switch off the main power. Leaving the main power on enables the automatic maintenance to be carried out periodically. If the automatic maintenance is not carried out, the printer may malfunction. For example, the print heads may be damaged.

Be sure to hold the handle of the front cover and keep holding it until the cover is completely opened or closed.

If you do not open and close the front cover gently, it may break or you may be injured.

STEP 2:Loading Media and Setting the Height

1. Loading Media (Media Setup)

NOTE

Be sure to hold the handle of the front cover and open and close it gently.

1. Check that the following screen is displayed.

```
SETUP MEDIA
```

MEMO

When this screen is not displayed, you cannot perform setup. To perform setup, make sure that there is nothing placed on the flat table, and then press [SETUP] for one second or longer. The flat table will come forward into a position in which you can set up the media.

2. Open the front cover.

3. Secure the media in place.

Printing tests are used to check that no dot drop-out occurs. For printing tests, use media for testing (width 80 × height 70 mm, width 3.1 × height 2.8 in. or bigger), not the media you will actually use.

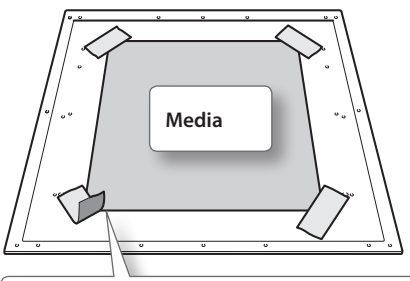

Secure the media with tape.

Secure the media in place using a substance such as commercially available tape affixed directly to the flat table. This method can be used for thin paper media or those that can be secured with tape only.

The media can be set anywhere as long as it does not protrude from the flat table.

Be aware that when there are folds or kinks in the media, they might hit the interior of the printer and cause damage.

4. Close the front cover.

2. Setting the Height of the Media Automatically

The height of the media is automatically detected, and the print heads are adjusted to the appropriate height for printing.

MEMO

- If the print surface is uneven, there is a limit to the area of unevenness.

☞ "Height Settings When the Print Surface is Uneven" (Master Guide)

- You can manually set the height of the media. The automatic height setting is not suitable if you do not want to make the head gap sensor come into contact with the media. In this case, you should set the height manually.

☞ "Setting the Height of the Media Manually" (Master Guide)

NOTE

Be sure to hold the handle of the front cover and open and close it gently.

1. Press [SETUP].

[SETUP] starts to flash.

2. Press [▲], [▼], [UP], or [DOWN] to move the flat table.

Bring the highest position of the media (print surface) into contact with the head gap sensor. When the head gap sensor reacts, a buzzer goes off.

```
HEIGHT:000.0mm ▸
                ↵
```

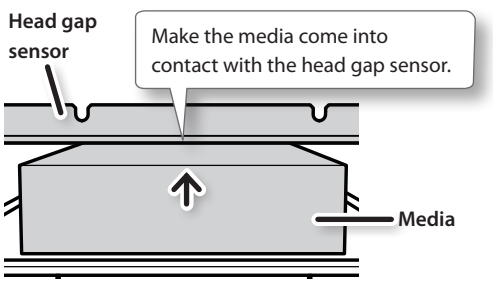

MEMO

This step can be performed with the front cover open.

3. Press [►].

The screen shown below appears.

```
AUTO DETECTION ◂
                ↵
```

4. If the front cover is open, close it.

The following step moves the flat table rearward. If the media hits the head gap sensor, the media may be damaged or the head gap sensor may malfunction.

To readjust the height of the media, press [◄] and perform the procedure again starting from step 2 in "2. Setting the Height of the Media Automatically" (P. 40).

5. Press [ENTER].

The flat table moves, and media height detection starts. The flat table rises while moving backward and forward until the media reaches a position where it comes in contact with the head gap sensor.

When the flat table stops moving and one short beep is heard, the setup is complete.

The media's height will be set automatically to a position about 1 mm (0.04 in.) away from the ink emission surface of the print heads.

MEMO

You can change the distance between the ink emission surface of the print heads and the media. For more information, see "Expanding the Distance between the Media and the Print Heads" (Master Guide).

STEP 3: Printing Tests and Normal Cleaning

Check for dot drop-out by performing printing tests before and after daily operations. If dot drop-out occurs, perform cleaning of the print heads (normal cleaning). Leaving the dot drop-out untreated may damage the print heads, so be sure to check for this condition each day after operation.

* Dot drop-out is a condition where dust or other foreign matter adheres to the print heads and interferes with normal ink emission.

1. Perform a Printing Test on Media for Testing

1. Remove just the white ink cartridge, shake it 50 times (about 15 seconds), and then reinsert this cartridge.

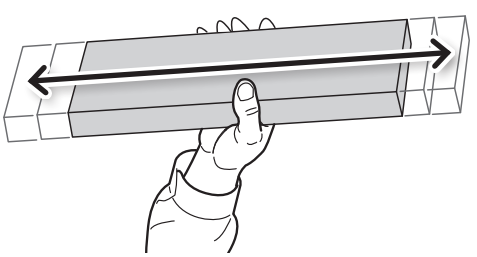

NOTE

The components in the white ink have a tendency to precipitate. If ink components precipitate, it will not be possible to print with correct colors. So that the ink mixes well, shake the ink cartridge horizontally with a stroke length of around 5 cm (2 in.) from each end of the ink cartridge.

The deposits may harden and cause problems including printer malfunctions if left alone for an extended period of time.

2. Press [FUNCTION].

The screen shown below appears.

```
FUNCTION
CLEANING
```

3. Press [►].

The screen shown below appears.

```
CLEANING
TEST PRINT
```

4. Press [ENTER].

A test pattern is printed.

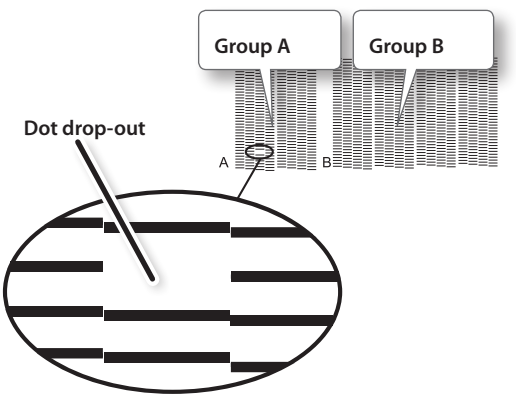

If dot drop-out is present, proceed to "2. Perform Normal Cleaning" (P. 42).

If there is no dot drop-out, proceed to "STEP 4: Performing Actual Printing" (P. 43).

If the printing-test results are difficult to interpret

Examine the results from different angles in a well-lit location. Take advantage of reflected light to enable visual checking.

2. Perform Normal Cleaning

1. Press [FUNCTION].

2. Press [►], then [▼].

The screen shown below appears.

```
FUNCTION
CLEANING
```

3. Press [►].

The screen shown below appears.

```
CLEANING
NORMAL CL.
```

4. Press [◄] or [►] to select the group of print heads that is not to be cleaned (P. 41).

```
NORMAL CL.
   AB
```

Group

5. Press [▲] or [▼] to clear the group of print heads that is not to be cleaned from the display.

```
NORMAL CL.
   AB
```

6. Press [ENTER].

Normal cleaning starts. It takes about two to three minutes.

```
CLEANING...
>>>>>
```

When finished, the screen shown below appears again.

```
NORMAL CL.
   AB
```

7. Press [FUNCTION].

The display returns to the original screen.

```
W:508mm L:330mm
H:100.0mm
```

8. Perform a printing test (P. 41) again to make sure the dot drop-out has been corrected.

If the problem persists, try performing cleaning again.

If the printer has been used for a long period, the problem may not be fixed even after performing cleaning two or three times. If this is the case, perform medium or powerful cleaning.

☞ "Medium and Powerful Cleaning" (Master Guide)

NOTE

UV ink will harden. It may adhere to the print head and solidify. If left alone, ink may clog the print heads and cause problems including printer malfunctions.

Clean the head manually when printing frequently with the print head at a distance from the print surface. This is called manual cleaning. To prevent clogging of the print heads, you may have to perform manual cleaning each time you print in some cases.

For more information, see "Manual Cleaning" (Master Guide).

STEP 4: Performing Actual Printing

This section explains how to print from this machine, using the included VersaWorks Dual (RIP & PRINT MANAGEMENT SOFTWARE). It assumes that you have already completed the following tasks.

- Installation of VersaWorks Dual
- Connecting VersaWorks Dual and this machine
- Learning the basic operation of VersaWorks Dual

☞ "Roland VersaWorks Dual Installation Guide"

- Preparing print data

In this section, a file saved as a PDF file is used.

1. Perform "STEP 2:Loading Media and Setting the Height" (P. 39)

Load the media that you actually want to print on and set the print area.

2. Load the Print Area Set on This Machine into VersaWorks Dual

1. Start VersaWorks Dual.

Check that:

- VersaWorks Dual connects to the machine.
- The machine's status is "Ready to Start Printing."

2. Double-click (or).

The "Queue A Properties" dialog box appears. (Display the properties for the input setting to use.)

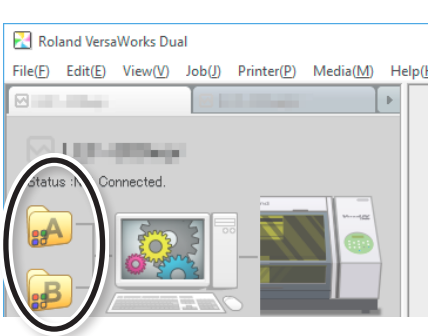

3. Click [Get Media Width].

Load the print area set on this machine into VersaWorks Dual.

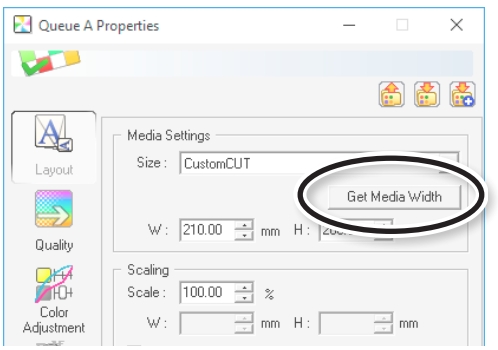

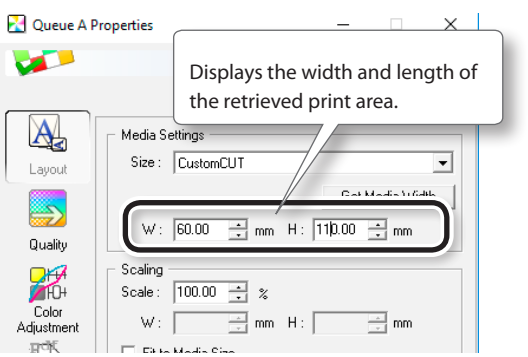

* To configure other settings, see the "VersaWorks Dual Installation Guide," the Help, or the "Special Color Ink Guide" (included).

4. Click [OK].

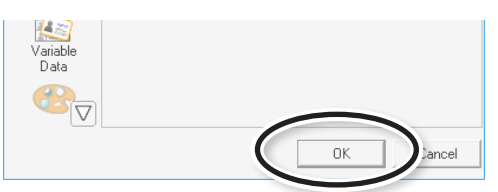

3. Output Print Data Using VersaWorks Dual

1. Click the [Queue A] tab in the [Job List], and then drag the print data to the Queue A job list (to the Queue B job list when the print setting is done on Queue B).

The contents of the data are displayed in the preview window, and the layout on the media is displayed in the layout window.

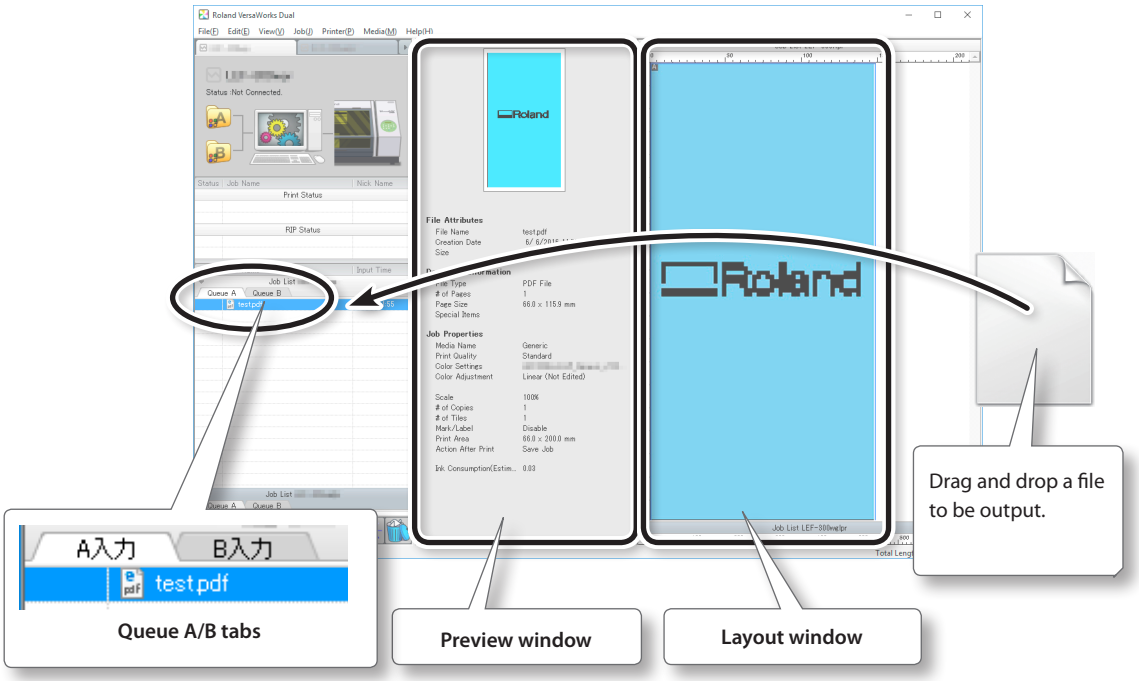

2. Double-click a print job in the job list.

The "Job Settings" window appears.

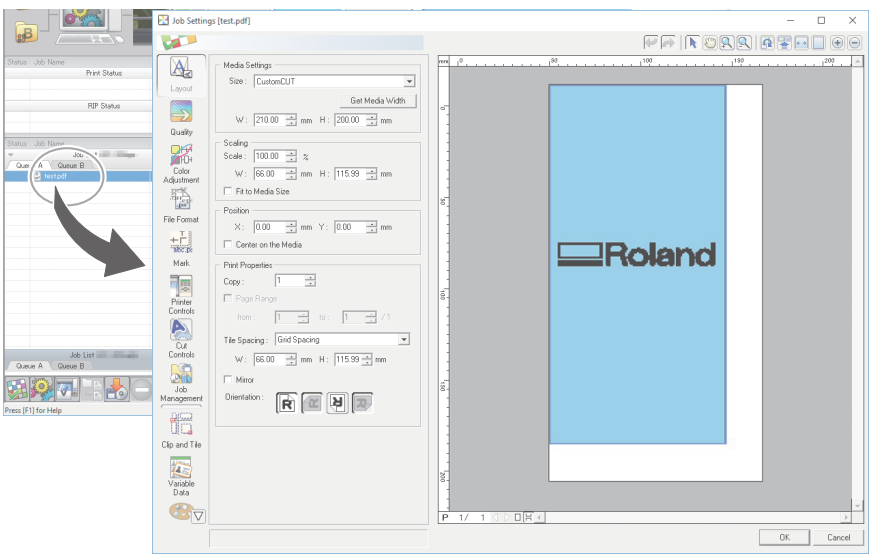

3. Use this screen to fit the print data in the print area and adjust the position of the print data.

The white part in the layout area is the print area that was loaded in step 1. Print data that is not in the print area will not be printed.

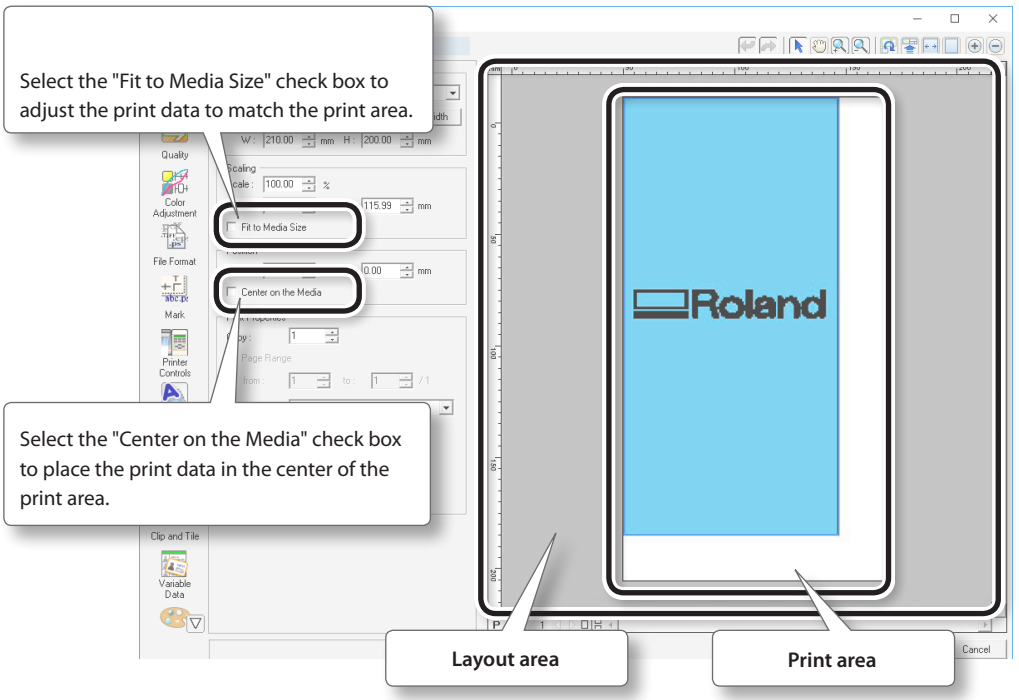

* This is an example of the display when "Center on the Media" is selected.

MEMO

The orientation in the VersaWorks Dual screen display is the opposite of the actual print orientation.

Make sure the media orientation is correct.

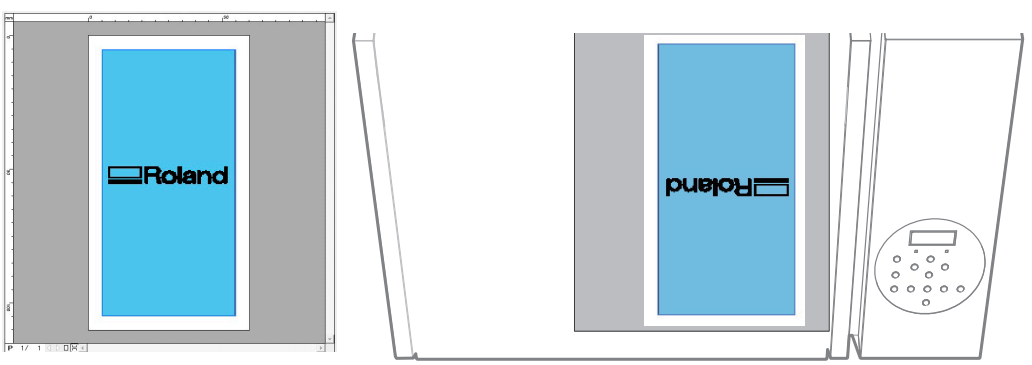

Orientation on the VersaWorks Dual screen

Actual print orientation

4. **After you have adjusted the printing position, click [OK].**

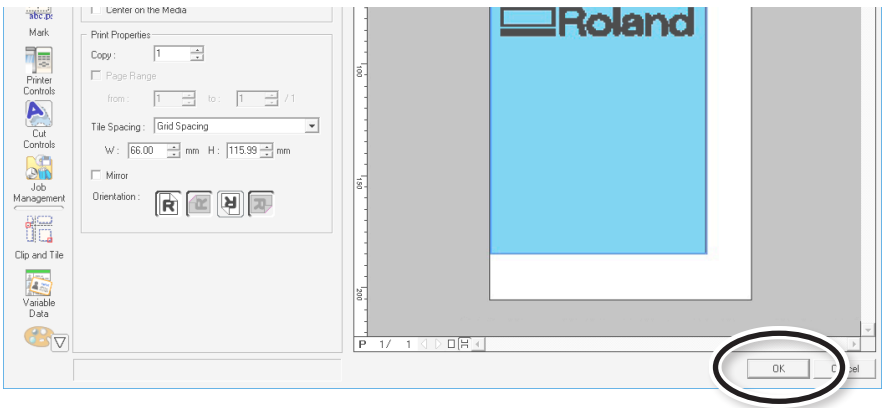

5. **Click .**

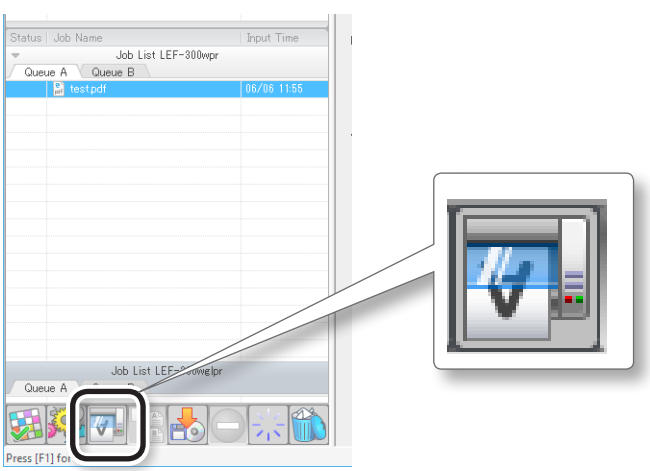

Printing will be started.

When the printing ends, the screen shown below appears on the display screen of the printer.

```
FINISHED PRINT
                ↵
```

Data from the computer is not accepted while this screen is displayed.

MEMO

If [PRT CONTINUE] is set to [ENABLE], the screen shown in the figure does not appear.

For more information, see "Continuously Outputting Print Data" (Master Guide).

6. **Press [ENTER].**

The screen shown below appears again.

```
W:508mm L:330mm
H:100.0mm
```

Data from the computer can be accepted again.

Pausing or Canceling Printing

You can pause and cancel printing before it finishes. However, we do not recommend resuming printing because colors may be uneven in the place where output stopped.

Procedure

1. Press [PAUSE] before printing finishes.

The printing operation is paused.

The screen shown below appears.

```
TO CANCEL, HOLD
  DOWN SETUP KEY
```

2. Press [PAUSE] again to resume printing.

Printing resumes. To cancel printing, go the next step without pressing [PAUSE].

3. Hold down [SETUP] to cancel printing.

The printing operation is canceled.

4. When printing is canceled, the computer stops sending data.

STEP 5: Printing Tests and Normal Cleaning after Daily Operations

Make sure to check for dot drop-out by performing printing tests after daily operations. If dot drop-out is present, perform normal cleaning.

☞ “STEP 3: Printing Tests and Normal Cleaning” (P. 41)

If problems such as dot drop-out persist even after you have performed normal cleaning several times, perform medium or powerful cleaning.

☞ "Periodic Cleaning Maintenance" (Master Guide)

NOTE

Frequently clean the inside of the machine using a vacuum cleaner or by wiping with a cloth moistened with water then wrung dry. If dust and dirt accumulate in the machine, they are likely to affix to printed materials.

☞ "About Care and Maintenance of the Inside of the Machine" (Master Guide)

STEP 6: Turning the Power Off

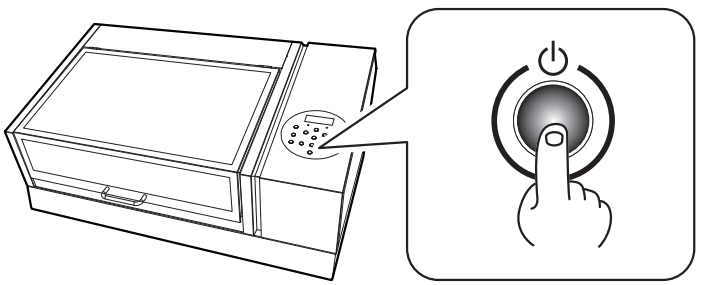

Hold down the sub power button for one second or longer.

The sub power turns off. Turn off the sub power after printing is complete.

NOTE

- Never switch off the main power. Leaving the main power on enables the automatic maintenance to be carried out periodically. If the automatic maintenance is not carried out, the printer may malfunction. For example, the print heads may be damaged.
- Never switch off the main power or unplug the power cord suddenly while operation is in progress. Doing so may damage the print heads. Be sure to first switch off the sub power. If the main power is accidentally switched off, immediately turn the main power and sub power back on.

For China

产品中有毒有害物质或元素的名称及含量

部件名称	有毒有害物质或元素					
	铅(Pb)	汞(Hg)	镉(Cd)	六价铬 (Cr(VI))	多溴联苯 (PBB)	多溴二苯醚 (PBDE)
印刷电路板	×	○	×	○	○	○
头部	×	○	○	○	○	○
壳体、底架	×	○	○	○	○	○
电源	×	○	×	○	○	○
其他（电缆、附件等）	×	○	○	○	○	○

○：表示该有毒有害物质在该部件所有均质材料中的含量均在 GB/T26572-2011 标准规定的限量要求以下。
×：表示该有毒有害物质至少在该部件的某一均质材料中的含量超出 GB/T26572-2011 标准规定的限量要求。

环保使用期限

此标志适用于在中国国内销售的电子信息产品，表示环保使用期限的年数。所谓环保使用期限是指在自制造日起的规定期限内，产品中所含的有害物质不致引起环境污染，不会对人身、财产造成严重的不良影响。
环保使用期限仅在遵照产品使用说明书，正确使用产品的条件下才有效。
不当的使用，将会导致有害物质泄漏的危险。

For EU countries

This product must be disposed of separately at your local waste recycling center. Do not dispose of in household waste bin.

Lever dit product in bij een lokaal afvalverzamelpunt. NIET met normaal huishoudelijk afval afvoeren.

Bitte führen Sie dieses Produkt separat Ihrer örtlichen Entsorgungsstelle zu. Bitte nicht mit dem normalen Hausmüll entsorgen.

Dette Produkt skal smides særskilt væk på den lokale affalds- og genbrugsstation. Må ikke smides ud sammen med almindeligt husholdningsaffald.

Ne jetez pas le produit avec vos ordures ménagères. Portez-le dans un centre recyclage des déchets.

Tätä tuotetta ei saa hävittää normaalien talousjätteiden mukana, vaan se on toimitettava ongelmajätteiden keräilypisteeseen hävitettäväksi.

Questo prodotto deve essere smaltito negli appositi contenitori per la raccolta differenziata, non buttare nel cestino dei rifiuti casalinghi.

Produkten måste kasseras separat på din lokala återvinningscentral. Släng inte produkten tillsammans med hushållssoporna.

Este producto debe devolverse al centro de reciclaje más cercano a su domicilio para su correcta eliminación. No lo tire a la basura.

Μην πετάξετε το αντικείμενο αυτό στο καλάθι των απορριμμάτων. Αφαιρέστε τις μπαταρίες και προσκομίστε το στο τοπικό κέντρο ανακύκλωσης.

Deite fora separadamente este produto no seu centro de reciclagem local. Não o deite fora no seu caixote do lixo.

Roland

1000016745

R3-160926