Roland

COMPUTER AIDED ENGRAVING MACHINE

CAMM-2

by ROLAND DIGITAL GROUP

PNC-2300A

USER'S MANUAL

Thank you very much for purchasing the PNC-2300A.

- To ensure correct and safe usage with a full understanding of this product's performance, please be sure to read through this manual completely and store it in a safe location.
- Unauthorized copying or transferral, in whole or in part, of this manual is prohibited.
- The contents of this operation manual and the specifications of this product are subject to change without notice.
- The operation manual and the product have been prepared and tested as much as possible. If you find any misprint or error, please inform us.

Roland DG Corporation

For the USA

FEDERAL COMMUNICATIONS COMMISSION RADIO FREQUENCY INTERFERENCE STATEMENT

This equipment has been tested and found to comply with the limits for a Class A digital device, pursuant to Part 15 of the FCC Rules.
These limits are designed to provide reasonable protection against harmful interference when the equipment is operated in a commercial environment.
This equipment generates, uses, and can radiate radio frequency energy and, if not installed and used in accordance with the instruction manual, may cause harmful interference to radio communications.
Operation of this equipment in a residential area is likely to cause harmful interference in which case the user will be required to correct the interference at his own expense.

Unauthorized changes or modification to this system can void the users authority to operate this equipment.

The I/O cables between this equipment and the computing device must be shielded.

For Canada

CLASS A NOTICE

This Class A digital apparatus meets all requirements of the Canadian Interference-Causing Equipment Regulations.

CLASSE A AVIS

Cet appareil numérique de la classe A respecte toutes les exigences du Règlement sur le matériel brouilleur du Canada.

NOTICE

Grounding Instructions

Do not modify the plug provided - if it will not fit the outlet, have the proper outlet installed by a qualified electrician.

Check with qualified electrician or service personnel if the grounding instructions are not completely understood, or if in doubt as to whether the tool is properly grounded.

Use only 3-wire extension cords that have 3-prong grounding plugs and 3-pole receptacles that accept the tool's plug.

Repair or replace damaged or worn out cord immediately.

Operating Instructions

KEEP WORK AREA CLEAN. Cluttered areas and benches invites accidents.

DON'T USE IN DANGEROUS ENVIRONMENT. Don't use power tools in damp or wet locations, or expose them to rain. Keep work area well lighted.

DISCONNECT TOOLS before servicing; when changing accessories, such as blades, bits, cutters, and like.

REDUCE THE RISK OF UNINTENTIONAL STARTING. Make sure the switch is in off position before plugging in.

USE RECOMMENDED ACCESSORIES. Consult the owner's manual for recommended accessories. The use of improper accessories may cause risk of injury to persons.

NEVER LEAVE TOOL RUNNING UNATTENDED. TURN POWER OFF. Don't leave tool until it comes to a complete stop.

ROLAND DG CORPORATION
1-6-4 Shinmiyakoda, Hamamatsu-shi, Shizuoka-ken, JAPAN 431-2103
MODEL NAME : See the MODEL given on the rating plate.
RELEVANT DIRECTIVE : EC MACHINERY DIRECTIVE (89/392/EEC)
EC LOW VOLTAGE DIRECTIVE (73/23/EEC)
EC ELECTROMAGNETIC COMPATIBILITY DIRECTIVE (89/336/EEC)

Table of Contents

To Ensure Safe Use

About ⚠WARNING and ⚠WARNING Notices

⚠WARNING	Used for instructions intended to alert the user to the risk of death or severe injury should the unit be used improperly.
⚠CAUTION	Used for instructions intended to alert the user to the risk of injury or material damage should the unit be used improperly. * Material damage refers to damage or other adverse effects caused with respect to the home and all its furnishings, as well to domestic animals or pets.

About the Symbols

	The △ symbol alerts the user to important instructions or warnings. The specific meaning of the symbol is determined by the design contained within the triangle. The symbol at left means "danger of electrocution."
	The ⃠ symbol alerts the user to items that must never be carried out (are forbidden). The specific thing that must not be done is indicated by the design contained within the circle. The symbol at left means the unit must never be disassembled.
	The ● symbol alerts the user to things that must be carried out. The specific thing that must be done is indicated by the design contained within the circle. The symbol at left means the power-cord plug must be unplugged from the outlet.

⚠WARNING

Do not disassemble, repair, or modify.
Doing so may lead to fire or abnormal operation resulting in injury.

Ground the unit with the ground wire.
Failure to do so may result in risk of electrical shock in the even of a mechanical problem

Do not use while in an abnormal state (i.e., emitting smoke, burning odor, unusual noise, or the like).
Doing so may result in fire or electrical shock.
Immediately switch off the power, unplug the power cord from the electrical outlet, and contact your authorized Roland DG Corp. dealer or service center.

Do not use with any electrical power supply that does not meet the ratings displayed on the unit.
Use with any other power supply may lead to fire or electrocution.

Do not operate if a transparent cover is cracked or broken.
If the transparent cover at the front or the side of the unit is cracked, contact a service agent immediately for repairs.

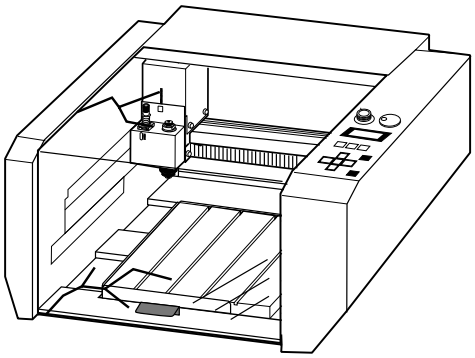

⚠CAUTION

Do not use with a damaged power cord or plug, or with a loose electrical outlet.
Use with any other power supply may lead to fire or electrocution.

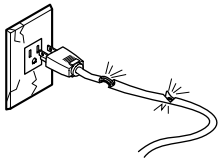

Do not injure or modify the electrical power cord, nor subject it to excessive bends, twists, pulls, binding, or pinching, nor place any object of weight on it.
Doing so may damage the electrical power cord, leading to electrocution or fire.

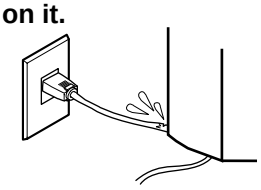

Do not allow liquids, metal objects or flammables inside the machine.
Such materials can cause fire.

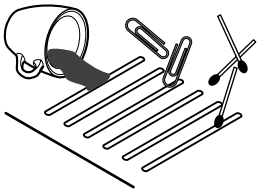

Unpacking, installation, and moving must be carried out by two or more persons.
Failure to do so may result in falling of the unit, leading to injury. (The machine weighs 28.5 kg (62.8lb.).)

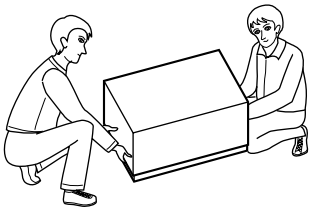

Do not carelessly insert the hands while in operation.
Doing so may result in injury (during manual operation.).

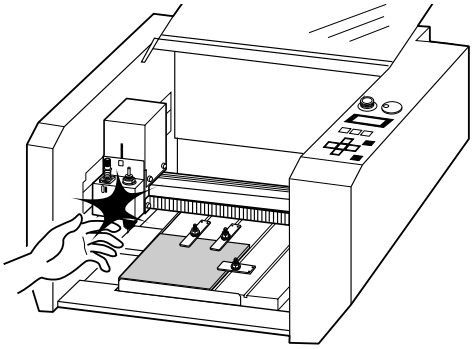

When not in use for extended periods, unplug the power cord from the electrical outlet.
Failure to do so may result in danger of shock, electrocution, or fire due to deterioration of the electrical insulation.

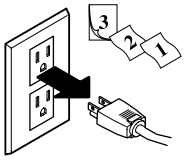

When unplugging the electrical power cord from the power outlet, grasp the plug, not the cord.
Unplugging by pulling the cord may damage it, leading to fire or electrocution.

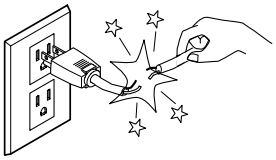

Install on a stable surface.
Failure to do so may result in falling of the unit, leading to injury.

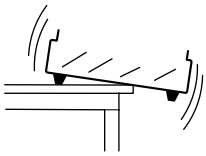

Do not block the ventilation holes.
Blocking the ventilation holes at the rear of the unit may prevent heat radiation and cause fire.

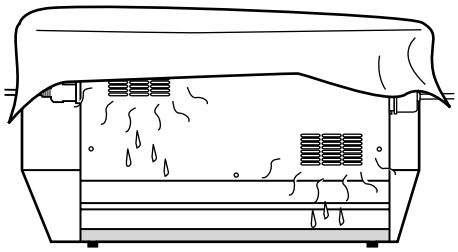

Perform dry cutting with no cutting oil.
Such materials can cause fire.

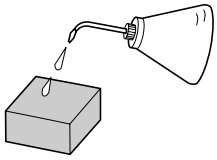

When you're finished, wash your hands to rinse away all cuttings.

⚠CAUTION

Do not touch the tip of the blade with your fingers.
Doing so may result in injury.

Please use a vacuum cleaner to remove cutting dust.
Do not use any blower like airbrush.
Otherwise, dust spread in the air may harm your health.

Before attempting to replace the motor brushes or the spindle motor, stop cutting operations on the PNC-2300A and allow to stand for an hour or so.
Failure to do so may result in burns from the hot motor.

Do not attempt to unplug the power cord with wet hands.
Doing so may result in electrical shock.

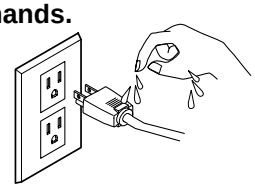

About the Labels Affixed to the Unit

These labels are affixed to the body of this product.
The following figure describes the location and content of these messages.

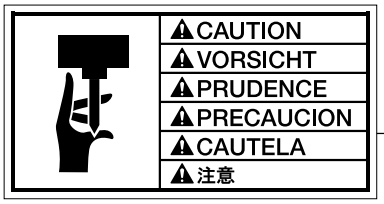

Handle tool with care.

Manipuler l'outil avec précaution.

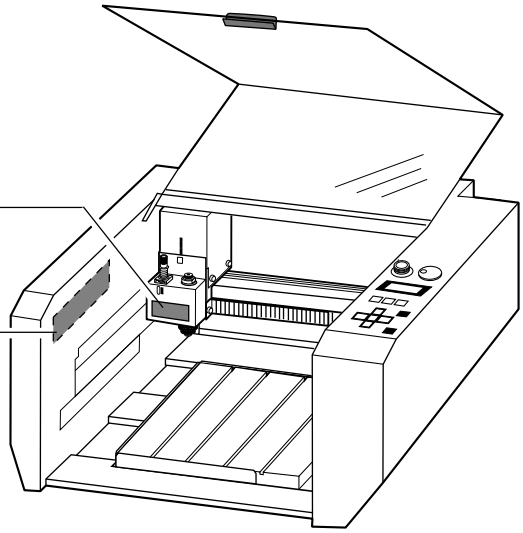

CAUTION
Please use a vacuum cleaner to remove cutting dust.
Do not use any blower like airbrush. Otherwise, dust spread in the air may harm your health or damage this machine.

PRECAUCION
Por favor, utilice un aspirador para limpiar la viruta y el polvo.
No utilice aire a presion para la limpieza, podria averiar la maquina, y no seria conveniente para su salud respirar el polvo.

PRUDENCE
Veuillez utiliser un aspirateur pour enlever la poussière.
Ne jamais utiliser de projecteurs d'air. La poussière soufflée dans l'air peut causer des problèmes de respiration et endommager votre machine.

VORSICHT
Bitte entfernen Sie Staub mit einem Staubsauger.
Niemals ein Gebläse verwenden. Der dadurch freigesetzte Staub ist gesundheitsschädlich und kann die Funktion Ihers Geräts beeinträchtigen.

CAUTELA
Usare un aspiratore per rimuovere polvere o trucioli da lavorazione.
Non usare compressori, altrimenti la polvere diffusa nell'aria potrebbere essere nociva alla salute o danneggiare la macchina.

注意
切削粉は吸い込み型のクリーナーを使用して除去して下さい。
吹き飛ばすエアガンは使用しないで下さい。
切削粉が飛び散り健康の障害になったり、機器に侵入し故障の原因となります。

Please use a vacuum cleaner to remove cutting dust.
Do not use any blower like airbrush. Otherwise, dust spread in the air may harm your health or damage this machine.

Veuillez utiliser un aspirateur pour enlever la poussière.
Ne jamais utiliser de projecteurs d'air. La poussière soufflée dans l'air peut causer des problèmes de respiration et endommager votre machine.

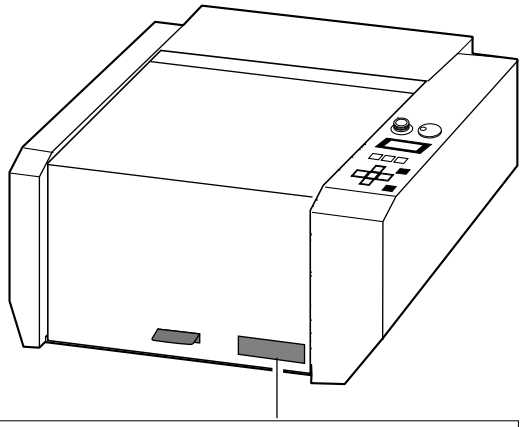

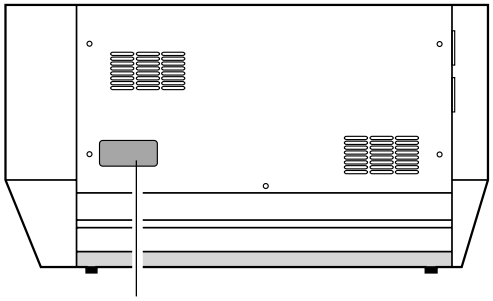

Model name
Rating plate
Use a rated power supply.

CAUTION
Be sure to determine that the machine is not moving at all, when opening the cover.

VORSICHT
Schauen Sie erst nach, ob sich alle beweglichen Teile im Ruhestand befinden, bevor Sie die Haube abnehmen.

PRUDENCE
Vérifiez d'abord si la machine est à l'arrét avant d'ouvrir le couvercle.

PRECAUCION
Asegurese de que la maquina no está en movimiento al levantar la cubierta.

CAUTELA
Siate sicuri che la macchina sia ferma prima di aprirlo.

注意
ドアを開ける場合は機械が完全に止まっていることを必ず確認してください。

Be sure to determine that the machine is not moving at all, when operating the cover.

Vérifiez d'abord si la machine est à l'arrét avant d'ouvrir le couvercle.

In addition to the ⚠**WARNING** and ⚠**CAUTION** symbols, the symbols shown below are also used.

NOTICE : Indicates information to prevent machine breakdown or malfunction and ensure correct use.

: Indicates a handy tip or advice regarding use.

MEMO

Part 1 Startup

1-1 Checking the Accessories

Check the following to make sure that you received all the items that were shipped along with the unit.

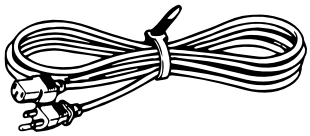

Power cord

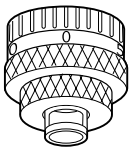

Depth regulator nose

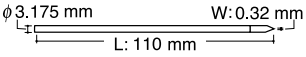

Character cutter

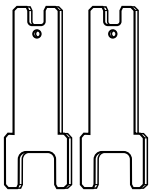

Wrenches

Cutter holder
(For diameter 3.175 mm
(1/8") cutters)

Collet
(For diameter 3.175 mm
(1/8") cutters)

Cutter holder
(For diameter 4.36 mm
(11/64") cutters)

Collet
(For diameter 4.36 mm
(11/64") cutters)

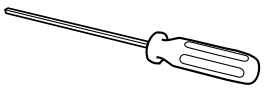

Hexagonal screw driver

Spare cutter securing screw

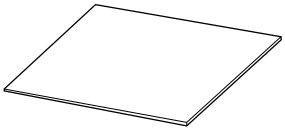

Adhesive sheet

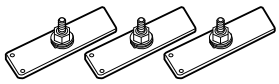

Clamps

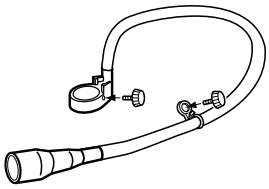

Vacuum adapter set

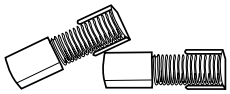

Motor brushes

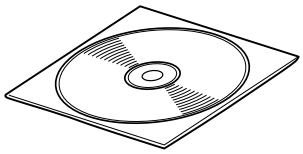

Roland Software Package
CD-ROM

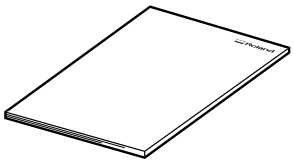

User's manual

1-2 Part Names and Functions

Left side view

Serial connector
A serial (RS-232C) cable is connected here.

Parallel connector
A parallel (printer) cable is connected here.

External output connector

Cover
Opening the cover during cutting results in an emergency stop. Any cutting data in use becomes invalid, and cutting cannot be continued.
If the cover must be opened during cutting, first press the **[ENTER/PAUSE]** key to pause the PNC-2300A, then open the cover. After the cover has been closed, cutting resumes when the paused state is canceled.
The spindle will not rotate while the cover is open.

Head
This moves the spindle (cutter) up and down). The head performs X-axis, Y-axis and Z-axis movement.

Scale (for Checking the Z-axis Cutting Range)
This can be used to confirm the cutting range of the Z axis.
The cutting range of the Z axis is 30 mm (1-1/8").
According to the scale, the cutting range is 5 to 35 (mm) when the depth-regulator nose is installed, and 0 to 30 (mm) when not installed.

Table
The table grips the workpiece to be cut.

Described on the following page

Z adjust screw
Loosen the Z adjust screw if it is necessary to adjust the depth regulator nose for performing engraving.

Cutter holder
This is where the cutter is mounted.

Scale (for Checking the Z1 Position)
When using the depth-regulator nose, this can be used to confirm the Z1 position that has been set.

Depth regulator nose
This is adjusted when engraving a material which does not have uniform thickness.

Micrometer dial
Knurled retainer nut
Depth nose

Right side view

Power switch
ON
POWER
OFF

Power connector
The power cord included with the machine is connected here.

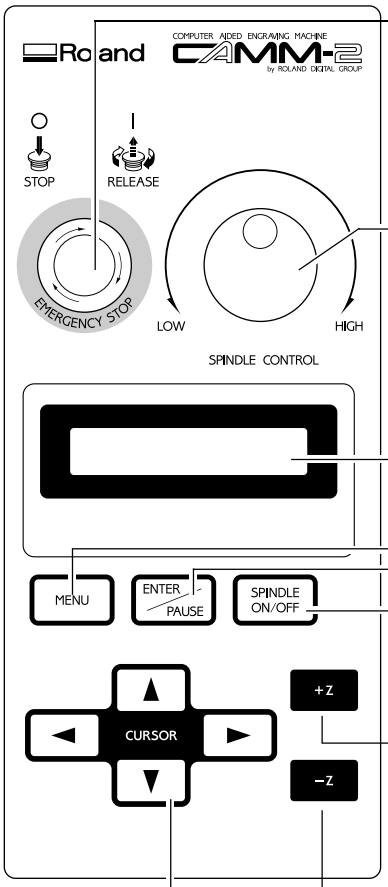

EMERGENCY STOP switch

This switch cuts the power supply and forces the machine to stop, regardless of whether operation is in progress. Press the EMERGENCY STOP switch immediately if dangerous or abnormal operation occurs.

Canceling an emergency stop

Rotate the red portion of the switch clockwise.

Spindle control

This is used to set the speed of the spindle motor.

Liquid-crystal display

The settings and selection choices (or values) for the PNC-2300A are shown on this display. Error messages also appear here in the event of a problem.

MENU key

This key scrolls through the menu on the liquid-crystal display (i.e., it changes the panel display).

ENTER/PAUSE key

This key is used to confirm settings, values, and selections made with the liquid-crystal display.
When pressed during cutting, operation is paused.

SPINDLE TEST ON/OFF key

This key is used to start and stop the spindle motor. The spindle will not rotate while the cover is open.

+Z (CUTTER UP) key

This key makes the cutter move in a positive direction on the Z axis (i.e., upward). Movement is always at a constant speed.

-Z (CUTTER DOWN) key

This key makes the cutter move in a negative direction on the Z axis (i.e., downward). Movement is always at a constant speed.

Arrow keys

Pressing an arrow key causes the XY table to move in the corresponding direction. Holding down the key makes the XY table move faster (except during spindle rotation, when the speed of movement does not change).
The arrow keys are also used together with the liquid-crystal display to manipulate settings, select items, display other choices, and change values.

Making Settings with the Liquid-crystal Display

When coordinate values are displayed:

Use the ◄ and ► keys to move along the X axis.
Use the ▲ and ▼ keys to move along the Y axis.
Use the +Z and −Z keys to move along the X axis.

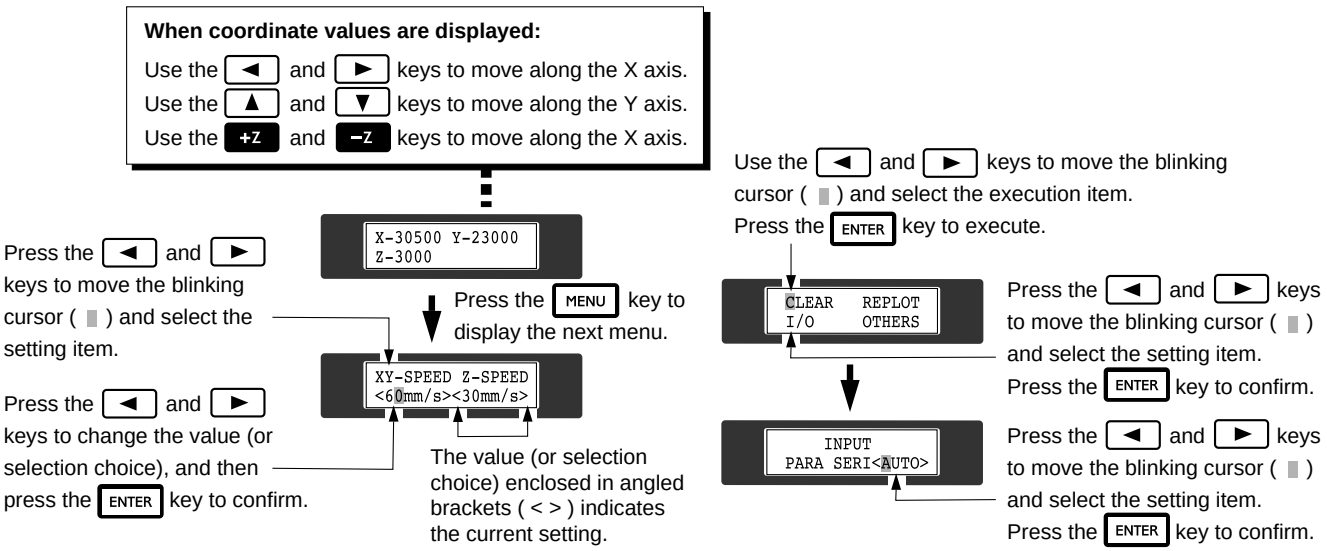

1-3 Installation and Connections

Installation

⚠CAUTION

Install on a stable surface.
Failure to do so may result in falling of the unit, leading to injury. Doing so may lead to faulty operation or breakdown.

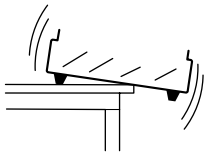

Unpacking, installation, and moving must be carried out by two or more persons.
Failure to do so may result in falling of the unit, leading to injury. (The machine weighs 28.5 kg (62.8lb.).)

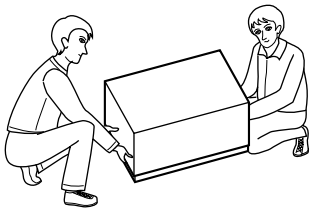

NOTICE Use within a temperature range of 5 to 40°C (41 to 104°F) and within a humidity range of 35 to 80%.

To prevent accidents, do not install in any of the following types of areas.
- Avoid use in areas subject to strong electric noise.
- Avoid use in areas subject to high humidity or dust.
- The PNC-2300A generates heat when used, and should not be installed in an area with poor heat radiation characteristics.
- Do not install in an area subject to strong vibration.

The space shown in the figure below is required for installation.
If you want to use the unit with a vacuum cleaner attached, see "1-7 Installing a Vacuum Cleaner" and ensure that you have the required amount of free space.

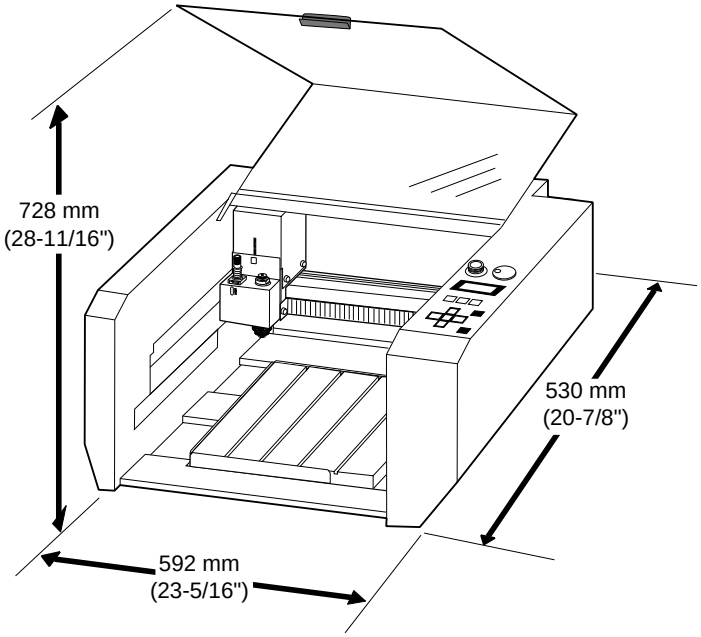

Connections

⚠WARNING

Ground the unit with the ground wire.
Failure to do so may result in risk of electrical shock in the even of a mechanical problem

Do not use with any electrical power supply that does not meet the ratings displayed on the unit.
Use with any other power supply may lead to fire or electrocution.

NOTICE Be sure that the power to both the computer and the main unit is switched off when connecting the cable.

Securely connect the power cord, computer I/O cable and so on so that they will not be unplugged and cause failure during operation. Doing so may lead to faulty operation or breakdown.

The cable for computer connection is optional. Please purchase the appropriate cable for the type of computer and software used.

For IBM PC or PC compatibles

Left side

Use either a parallel cable or serial cable to connect.

Crossover serial (RS-232C) cable (sold separately)

Screw

Screw

Parallel (Centronics) cable (sold separately)

Screw

Screw

Lock-use pin

RS-232C connector on the computer

Printer connector on the computer

For Macintosh

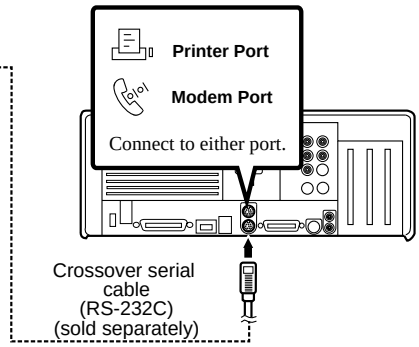

Use a cable with the following specifications.

Mini-Din 8-pin male connector - D-sub 25-pin male connector
Apple crossover cable (JCRC01 compliant)

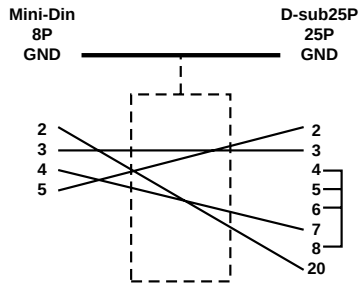

Right side

Power cord

1-4 Installing the Software

Using with Windows®

The included CD-ROM contains several pieces of software for operating the PNC-2300A.

Operating environment

	MODELA Applications	Dr. Engrave	3D Engrave	Virtual MODELA
Computer	Personal computer running Windows 95, Windows 98, or Windows NT 4.0			
CPU	If you're using Windows 95: i486SX or better (Pentium 100 MHz recommended) If you're using Windows 98 or Windows NT 4.0: i486DX or better (Pentium 100 MHz recommended)			
System Memory	If you're using Windows 95: 8 MB or more (10 MB or more recommended) If you're using Windows 98 or Windows NT 4.0: 16 MB or more (32 MB or more recommended)			
Hard Disk	7 MB or more of free space	10 MB or more of free space	10 MB or more of free space	5 MB or more of free space

Setting Up the Program

* When setting up the software under Windows NT, log on with a group other than [Guest].

1 Switch on the computer and start Windows.

2 Place the CD from the Roland Software Package in the CD-ROM drive.
The Setup menu appears automatically.

3 When the screen shown below appears, click the ▼ in [Click here], then choose [PNC-2300A].
Click [Install].
To view the description of a program, click the button. To view the manual, click the button.
(There are manuals in PDF format for the programs that the button references. Acrobat Reader is required to view PDF files.)
If Acrobat Reader is not set up on your computer, you need to set it up.
The included CD-ROM also contains Acrobat Reader.
The locations are as shown below.

[Acrobat] - [English] - [ar302.exe]
(This runs under Windows 95, Windows 98, or Windows NT 4.0.)

If there are programs you don't want to install, then clear their check boxes before you click [Install].

4

The Setup program starts. Follow the messages to carry out setup and finish setting up the program.

* When the setup for one program finishes, the setup for the next program starts.
In the interval until the next setup starts, a dialog box showing the progress of processing is displayed.

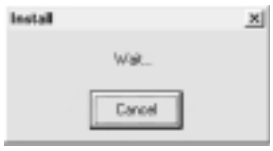

5

If the following screen appears while installing the driver, click the drop-down arrow and choose the port for the cable connected to the computer.

When using an RS-232C (serial) cable
[COM1:] or [COM2:]
When using a printer (parallel) cable
[LPT1:] or [LPT2:]

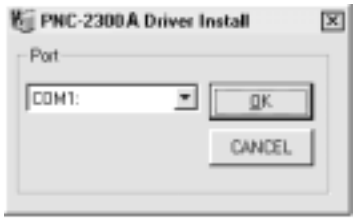

6

The driver settings appear.
When you make the settings for the communication parameters of PNC-2300A, make the parameters match the values displayed here.
Click [Close] to finish installing the driver.The driver

7

When all installation finishes, the screen at right appears.
Click [Close].

8

After returning to the menu screen for installation, click ☒.

9

Remove the CD-ROM from the CD-ROM drive.

How to use Help

If you have trouble using the program or driver, see the help screens. Help contains information such as descriptions of software operation, explanations of commands, and tips for using the software more effectively.

1 From the [Help] menu, clik [Contents].

2 Clicking on text that is green and underlined (by a solid or dotted line) displays an explanation.

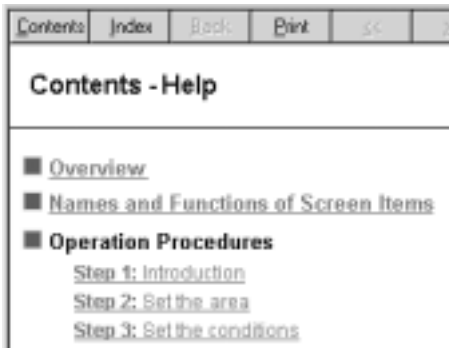

3 Clicking on an image area that contains an explanation displays the explanation.

Tip

- When the pointer moves over green underlined text, it changes to a pointing hand ( ).
- When the pointer moves over a location where an explanation is included, it changes to a pointing hand ( ).

When there's a [?] button on screen

Clicking [?] in the upper-right corner of the window makes the mouse pointer change to a question mark ( ). You can then move the pointer over any item you wish to learn more about, then click on the item to display an explanation of it.

When there's a [Help] button on screen.

Clicking [Help] lets you view help for the window or software.

Using with Macintosh

The included CD-ROM contains programs for the Macintosh that output cutting data to modeling machines from Roland DG Corp. (such as the MODELA, CAMM-2, and CAMM-3). Set up MODELA Player for Mac OS from the included CD-ROM.
For more information and details of commands on how to use MODELA Player for Mac OS, see the help screens.

Operating environment

●Computer	A Power Macintosh, or PowerBook with a PowerPC processor.
●System	Mac OS 7.5 or higher
●System Memory	20 MB or more (40 MB or more recommended)
●Hard Disk	3 MB or more of free space

Setting Up the Program

1 Turn off any virus-detection software.

2 Insert the included CD-ROM into the CD drive.

3 Double-click the CD icon to open.

4 Double-click the [Menu] icon.

5 When the screen shown below appears, click the allow in [Click here], then choose [PNC-2300A]. Click [Install].
To view the description of a program, click the [i] button.

6 Follow the messages to carry out setup and finish setting up the program.
When installation is completed, remove the CD-ROM form CD-ROM drive.

How to use Help

Help contains information such as explanations of MODELA PLAYER commands and tips for using MODELA PLAYER more effectively.

1 Open the [ ] menu and choose [MODELA PLAYER Help].
The MODELA PLAYER help screen appears.

2 For information on how to use help, see "Using Help."

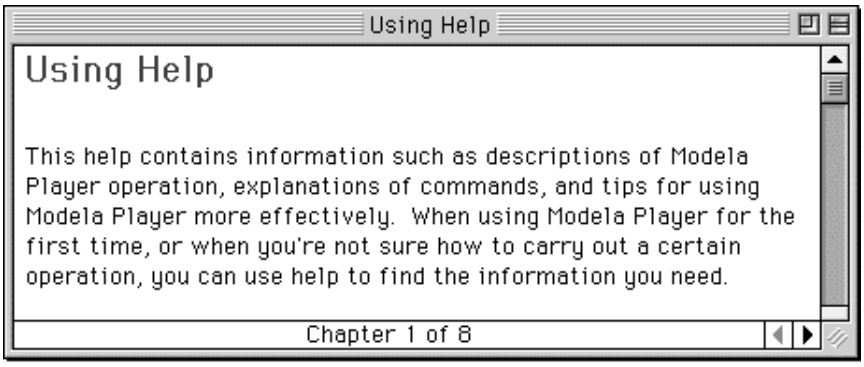

Settings for Communication Parameters

The settings are fixed at no parity, 8 bits, and one stop bit. For information about setting the bit rate (transmission speed), see the help screens.

1-5 Setting the Connection Parameters

Connection with a parallel cable is called a “parallel connection,” and connection with a serial cable is called a “serial connection.” Make the appropriate settings on both the computer and the PNC-2300A to configure the equipment for the type of connection that has been made. Normally, the setting on the PNC-2300A should be made to match the setting on the computer. The steps below describe how to set connection parameters on the PNC-2300A. To make the settings on the computer, refer to the manual for the computer or the software in use.

1 Press the **[MENU]** key to make the following screen appear on the display.

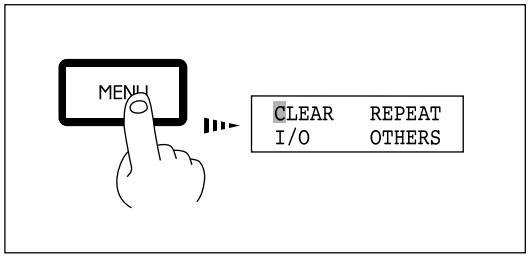

2 Press the **[►]** key to move the blinking cursor (“ ”) to “**I/O**,” and then press the **[ENTER]** key.

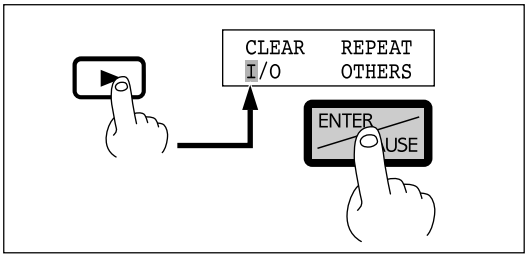

3 Press the **[►]** key to move the blinking cursor (“ ”) to “**AUTO**,” and then press the **[ENTER]** key.

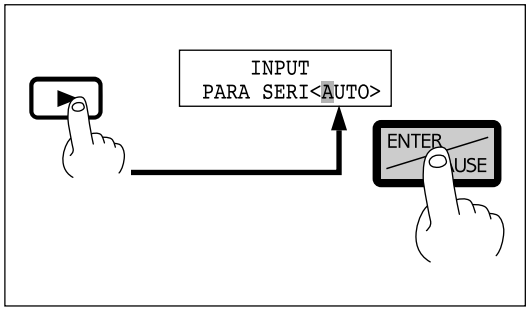

4 Press the **[MENU]** key once.
Make the settings for stop bit, then press the **[ENTER]** key.

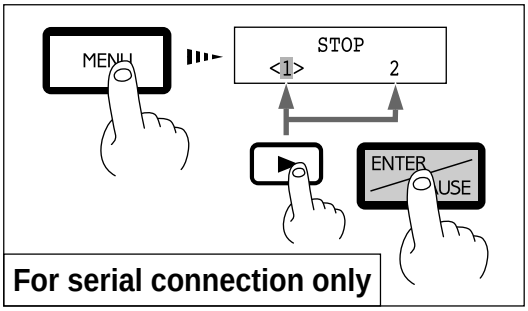

5 Press the **[MENU]** key once.
Press the Make the settings for data bits, then press the **[ENTER]** key.

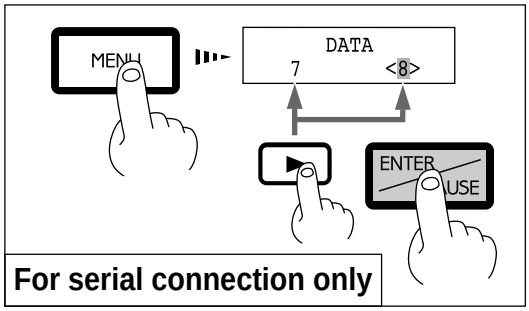

6 Press the **[MENU]** key once.
Make the settings for parity check, then press the **[ENTER]** key.

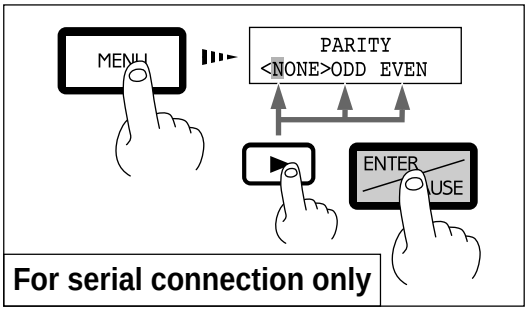

7 Press the **[MENU]** key once.
Make the settings for baud rate, then press the **[ENTER]** key.

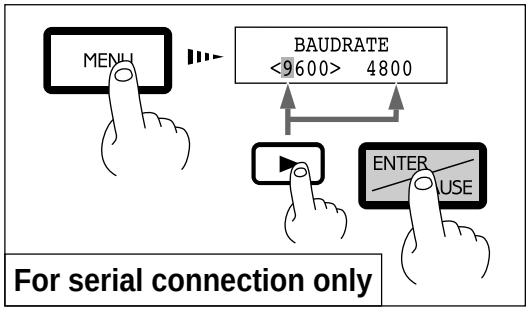

8 Press the **[MENU]** key once.
Make the settings for handshake, then press the **[ENTER]** key.

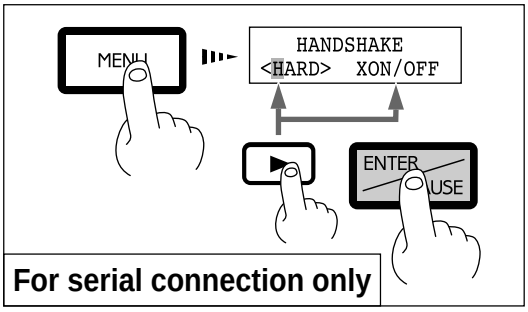

1-6 Loading a Workpiece for Cutting

NOTICE Fasten the tool and material securely in place.

To load workpiece, use the adhesive sheet or clamps included with the machine.
When performing engraving that subjects the workpiece to a load, use the clamps to secure the workpiece in place. When engraving the edge of the workpiece, use the adhesive sheet.
Large-size material (i.e., material that is about the same size as the PNC-2300A's table) cannot be affixed to the table securely using the adhesive sheet or clamps. In such cases, use commercially available double-sided tape to secure the workpiece in place.

A vacuum table (ZV-23A) and a center vise (ZV-23C) are optionally available and should be purchased if needed.

Loading Workpiece Using the Adhesive Sheet

NOTICE Do not attempt to wash the adhesive sheet with water. Doing so will damage the adhesive surface and make it impossible to grip the material.

1 Place the adhesive sheet on the table and press it down.

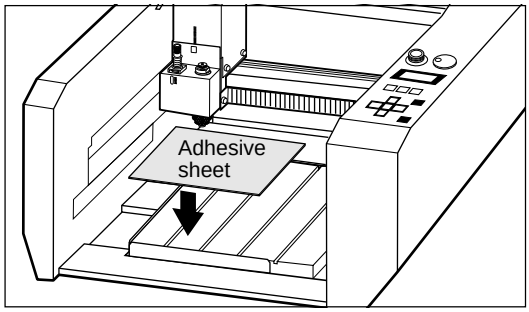

2 Place the workpiece to be cut on the adhesive sheet and fasten it while pressing down.

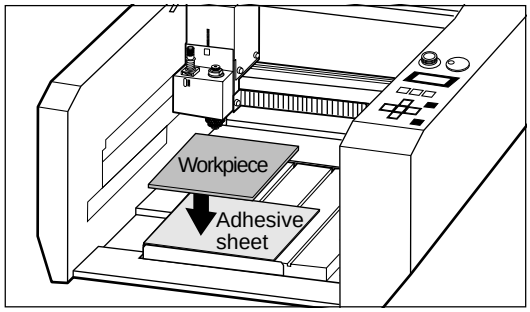

Store the adhesive sheet in a location free from dust.

Loading Workpiece Using the Clamps

1 Place the workpiece on the table.

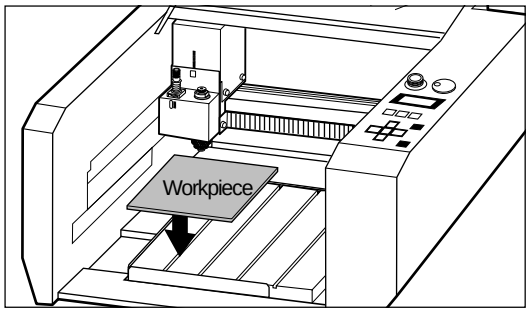

2 Slide the square portion protruding from the bottom of the clamp plate into the groove on the table to secure the workpiece in place.

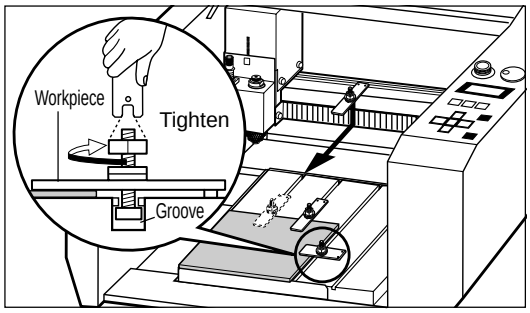

Loading Workpiece Using Commercially Double-sided Tape

Apply the double-sided tape to the bottom of the workpiece and secure it to the table.

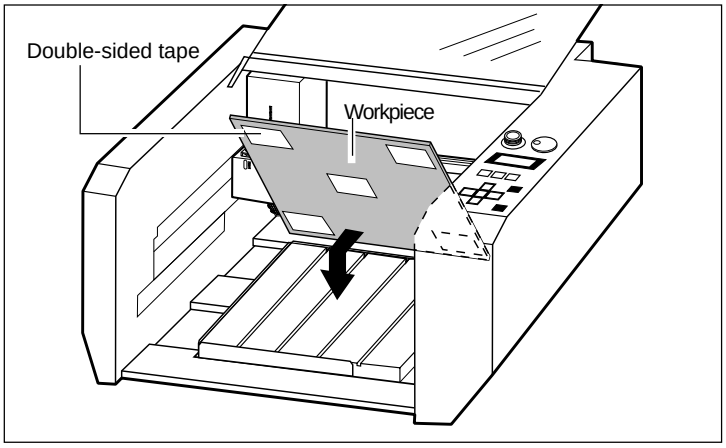

1-7 Loading a Cutter

⚠CAUTION

Do not touch the tip of the blade with your fingers.
Doing so may result in injury.

Installing the Cutter holder and Collet

NOTICE

To install an end mill using the optionally available collet set (ZC-23), detach the blade holder. If you try to perform machining with the blade holder installed, the vibration may make it come loose and fall off.

Be sure to use the wrench included with the unit. Using a wrench other than the included one may result in overtightening, making it impossible to remove the collet or damaging the spindle.

Install a cutter holder and collet which are suitable for the cutter to be used. The combination of cutter, cutter holder, and collet is correct if the diameter of the cutter just fits in the hole in the cutter holder and collet.
Two types of cutter holders and collets are included. When using the included character cutter, which has a diameter of 3.175 mm (1/8"), install the cutter holder and collet for use with cutters that are 3.175 mm (1/8") in diameter. When using the optional cutter, which has a diameter of 4.36 mm (11/64"), install the cutter holder and collet for use with cutters that are 4.36 mm (11/64") in diameter.

Install the cutter holder and collet for the cutter to be used.

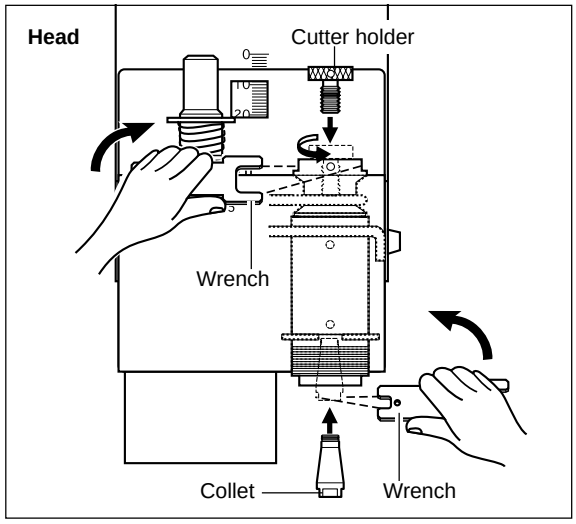

When Using the Depth regulator nose

Using the depth regulator nose makes it possible to engrave even workpiece of non-uniform thickness at the same depth.

1 Rotate than depth regulator nose in the direction of the arrow 2 in the figure to tighten it completely.

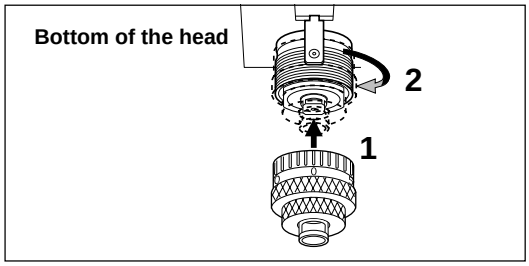

2 This determines the engraving depth (cutting-in amount). The scale on the micrometer dial assembly has 25 grooves, with one groove corresponding to an engraving depth of 0.0254 mm (0.001"). (One full turn of the scale corresponds to an engraving depth of 0.635 mm (0.025").) Rotate the scale in the direction of the arrow shown in the figure by an amount equal to or greater than the engraving depth.
For example, when engraving to a depth of 0.5 mm (0.0197"), the scale should be rotated by 20 grooves (approximately one full turn). For engraving at a depth of 1.5 mm (0.0591"), rotate the scale by 59 grooves (approximately three turns).

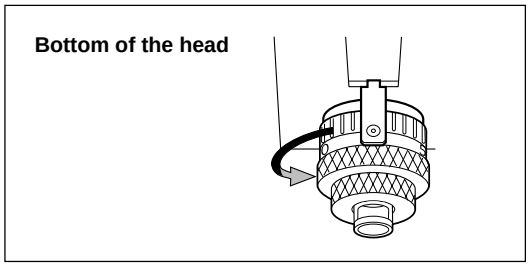

3 Loosen the Z adjust screw.

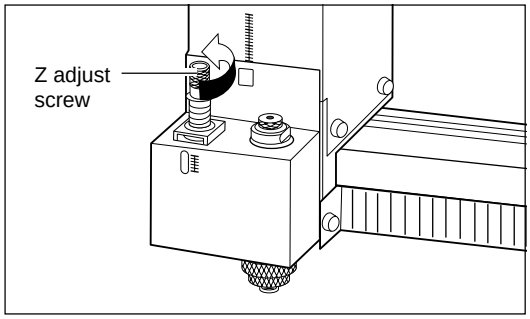

4 Press the arrow keys and the **[-Z]** key to move the tip of the depth nose to the surface of the workpiece.

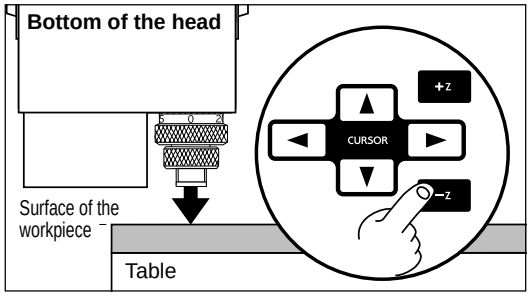

If the depth regulator nose does not reach the surface of the workpiece even when the **[-Z]** key is held down, rotate the micrometer dial in the direction shown by the arrow in the figure to extent the tip of the depth regulator nose to the workpiece surface.
If the tip of the depth regulator nose doesn't reach the surface of the workpiece because the workpiece is too thin, place a board between the workpiece and the table.

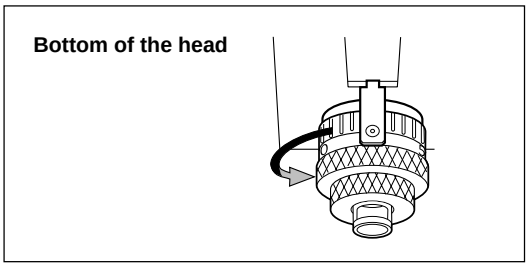

5 Use the height setting made in step 4 to set Z0. Z0 is the reference point for raising and lowering the spindle.
Refer to “Setting the Z0 Position.”

6 Insert the cutter into the hole in the cutter holder, and use the hexagonal screwdriver that comes with the machine to tighten the cutter mounting screw.

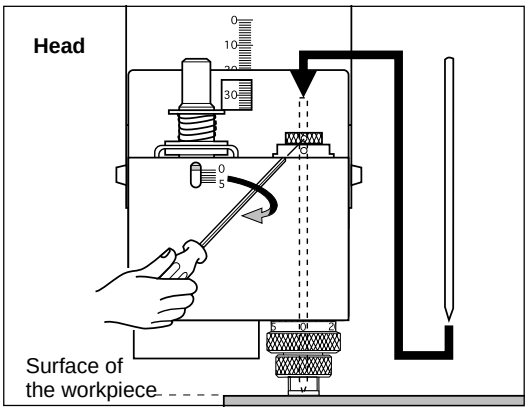

7 Raise the spindle with the **[+Z]** key.

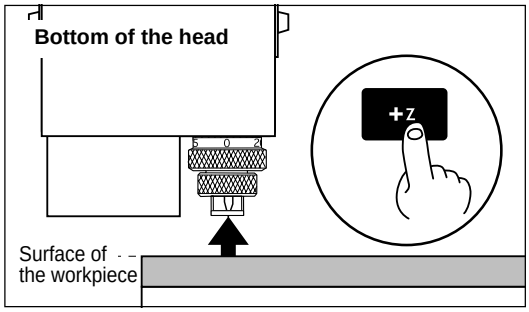

8 Rotate the dial in the direction of the arrow shown in the figure to extend the cutter to the engraving depth (cutting-in amount).
Move the cutter out just enough for the necessary engraving depth.
The lines printed on the dial indicate 0.0254 mm (0.001") for each mark. For instance, to set a cutting depth of 0.5 mm (0.0197"), rotate an 20 mark portion.

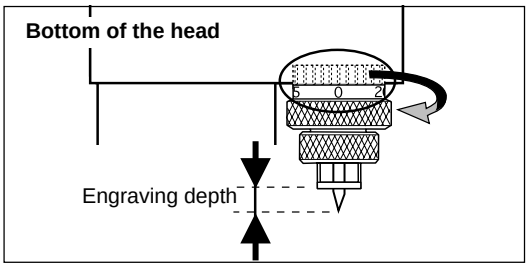

When setting the engraving depth with software, set a depth about 2 mm deeper than the depth that would be set on the micrometer dial. (In other words, 2 mm deeper than the actual engraving depth.)
Engraving can be done at a standard depth by increasing the force on the workpiece from the top.

When using the depth regulator nose to perform engraving, the Z1 point (the tool-down position) is set to a height lower than the actual engraving depth.
As a result of this, Z1 may be set to a position lower than the surface of the table.

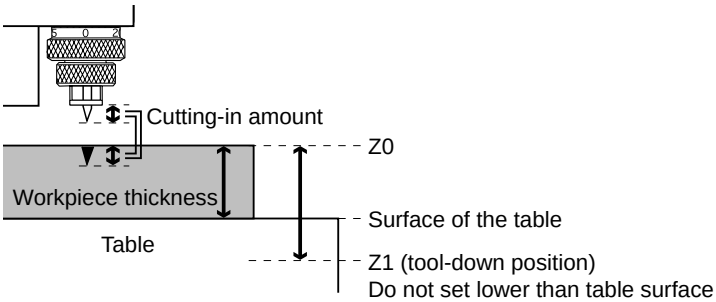

At this time, the error "Bad Parameter" appears during engraving, and operation stops. To clear the error, switch off the power.

To avoid errors, place a flat board under the workpiece to serve as a lifting base.
Use a board of the following thickness.

Thickness of board placed under workpiece > [Z1] - [Workpiece thickness]

A thickness of about 5 mm (0.2") is appropriate. If the board is too thick, the Z-axis operating range (30 mm (1.18")) may be exceeded, making engraving impossible.

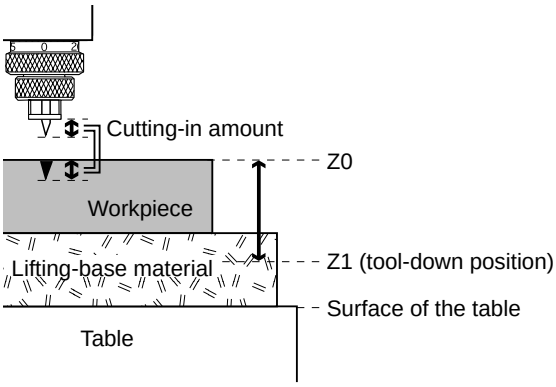

When Not Using the Depth regulator nose

If you do not use the depth regulator nose, take a table workpiece made of ABS plastic about 10 mm (1/2") thick, secure it in place on the included table, and perform surface leveling. By using this as the table surface, you can carry out engraving at a uniform depth.

1 Loosen the Z adjust screw.

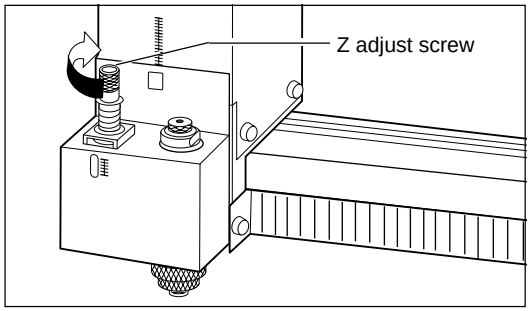

2 Press the arrow keys and the **[-Z]** key to move the tip of the head to a position close to the surface of the workpiece.

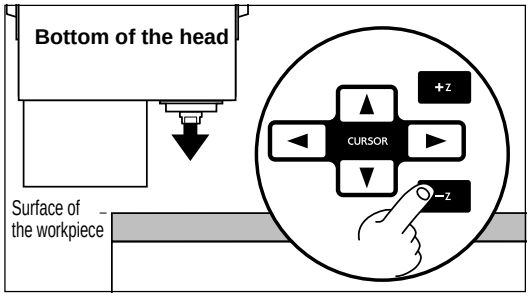

3 Insert the cutter into the hole in the cutter holder and position the tip so that it gently touches the surface of the workpiece. Use the hexagonal screwdriver that comes with the machine to tighten the cutter mounting screw.

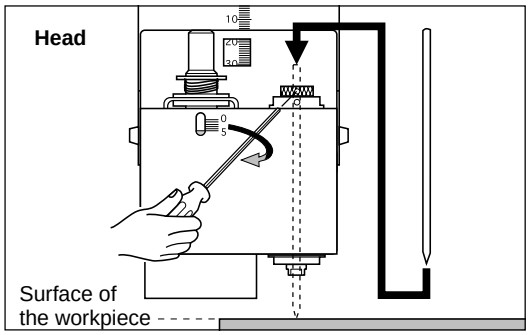

4 Use the operation panel to set Z0.
Refer to “Setting the Z0 Position.”

Setting the Z0 Position

"Z0" is the origin point for the Z axis. This is normally set at a position which corresponds to the surface of the secured workpiece when mounting the cutter.

1 Press the **[MENU]** key to make the following screen appear on the display.

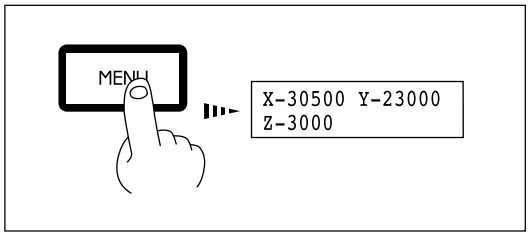

2 Press the **[ENTER]** key to make the following screen appear on the display.

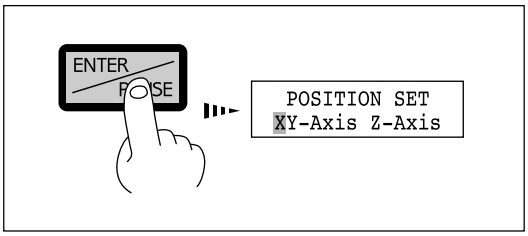

3 Press the **[►]** key to move the blinking cursor (" ") to "**Z-Axis**," then press the **[ENTER]** key.

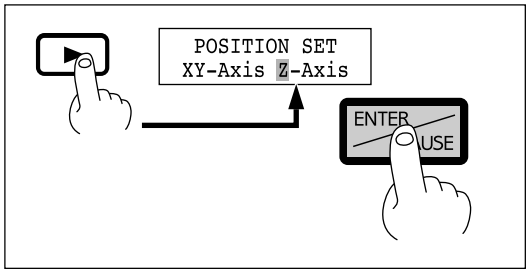

4 Make sure the blinking cursor is on "**Z0**" and press the **[ENTER]** key.

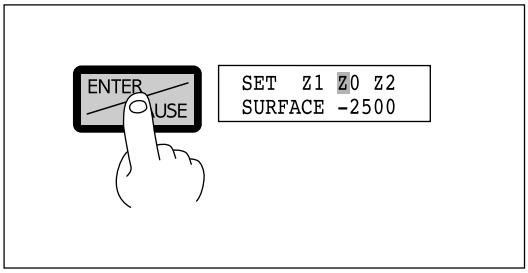

5 Make sure the blinking cursor is on "**Y**" and press the **[ENTER]** key.

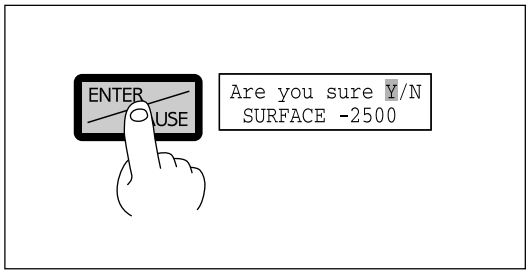

6 Selecting "**Y**" displays the following message. Selecting "**N**" returns to the coordinate display (the screen shown in step 1).

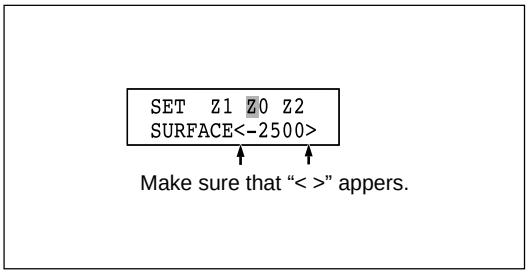

1-8 Vacuum Cleaner Connection

NOTICE Use a vacuum cleaner that lets you adjust the amount of suction and is equipped with an overload protector.

Always allow a minimum gap of 30 cm (11-13/16") on the side where the vacuum hose exits. The vacuum hose must have sufficient space in which to move. When the vacuum hose cannot move smoothly, it can cause malfunctions or errors in operation.

When the fitting diameters do not match or when the vacuum duct cannot be inserted into the suction opening of the vacuum cleaner, use strong commercial tape (cloth or electrical) to join the fittings.

Vacuum up cutting chips and grit during an on-going cutting operation, using the vacuum adapter, and commercial vacuum cleaner.

Before you install the vacuum adapter

1) Switch on the power and press the **[ENTER]** key. (The head moves inward and to the left.)
2) Press the [▼] key to move the head leftward and toward the front.
3) Switch off the power.

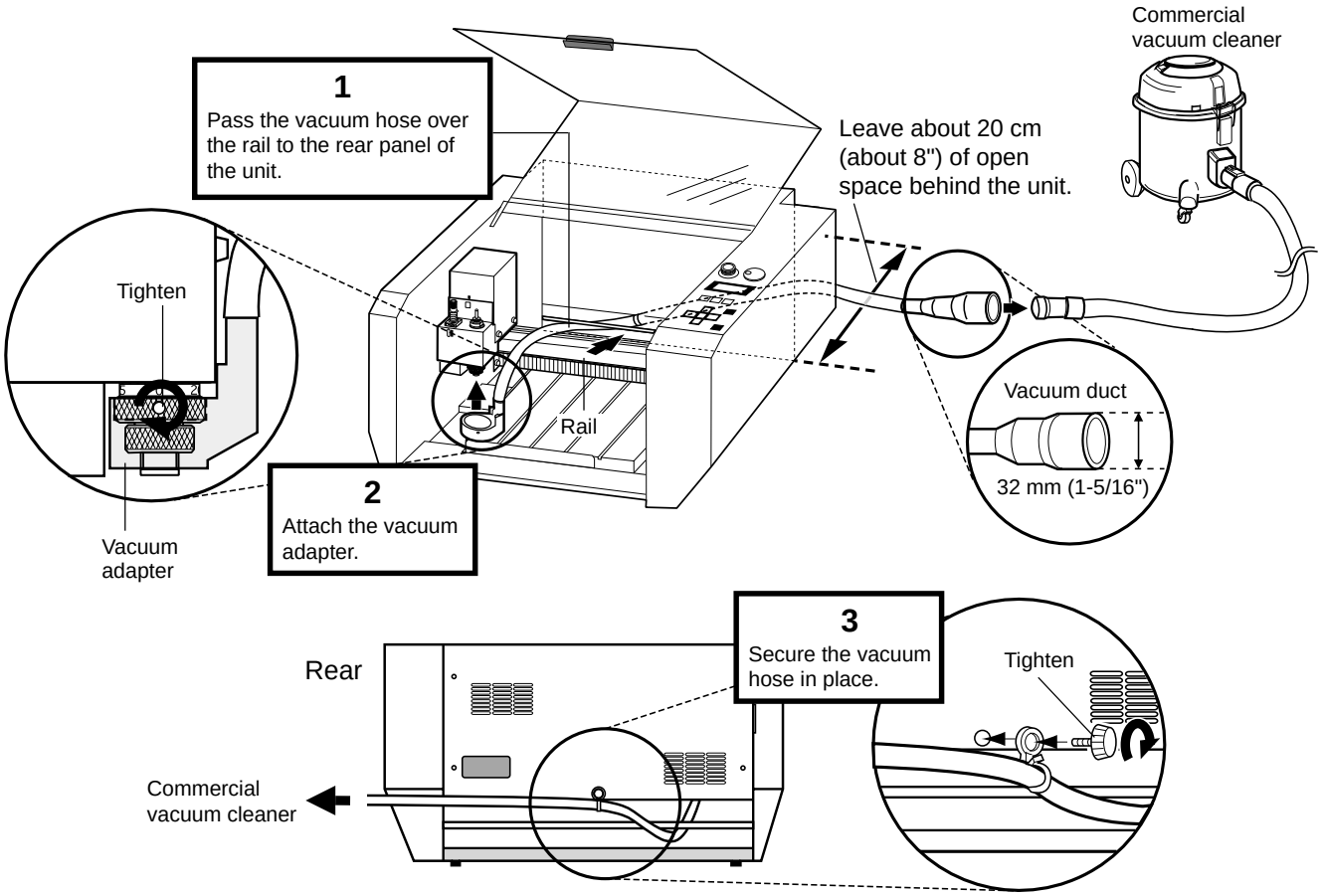

1-9 Setting the Origin (Home Position)

The home position is the point that becomes the origin point in the X and Y directions. Usually, this point is set at the front left corner of the fixed workpiece. The setting method explained here, uses the left, bottom corner (nearest the operator) of the workpiece as the home position.
* The home position points are registered in the PNC-2300A memory right after power is turned on and before power is turned off.

1 Press the **[MENU]** key to make the following screen appear on the display.

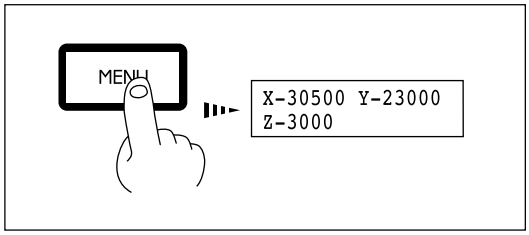

2 Press the **[ENTER]** key to make the following screen appear on the display.

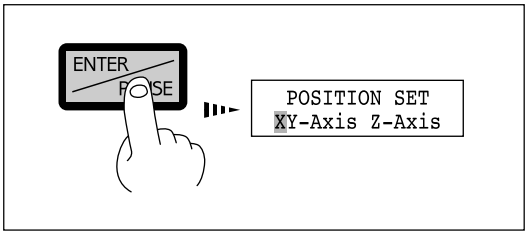

3 Press the **[►]** key to move the blinking cursor ("▯") to "**XY-Axis**," then press the **[ENTER]** key.

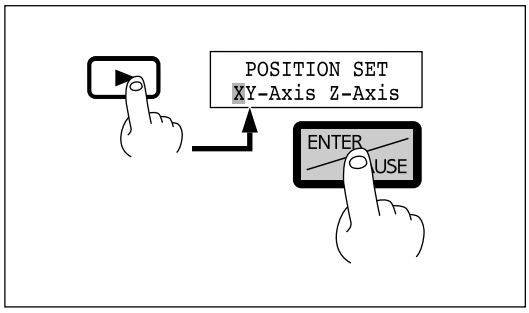

4 Press the arrow keys and the CUTTER UP/DOWN keys to move the cutter with the front left corner of the workpiece.

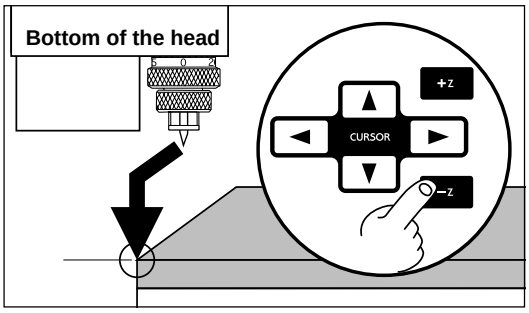

5 Press the **[ENTER]** key.

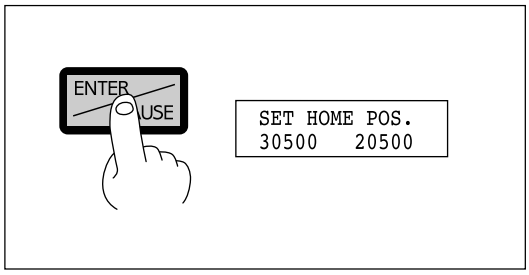

6 Make sure the blinking cursor is on "**Y**" and press the **[ENTER]** key.

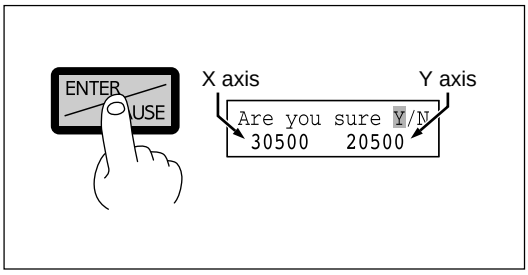

7 Selecting "**Y**" displays the following message. Selecting "**N**" returns to the coordinate display (the screen shown in step 1).

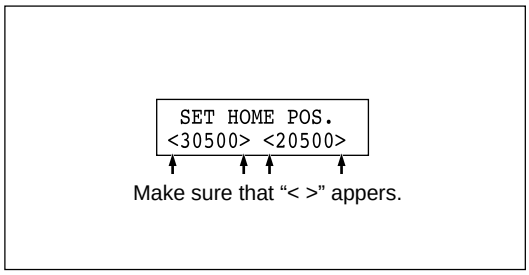

1-10 Cutting Condition Setting

Before you begin the actual cutting process, the cutting conditions such as the revolution speed of the spindle motor and the feeding speed of each axis must be designated according to the quality of the workpiece and the type of cutter used. There are several deciding factors to be taken into account when designating the cutting conditions.

1. The quality of the workpiece
2. The type of cutter used
3. The diameter of the cutter used
4. The cutting method
5. The cutting shape

Designate the cutting conditions in consideration of the above factors by performing the following three PNC-2300A setting operations.

1. The spindle motor revolution speed (cutter revolution speed)
2. The feeding speed (cutter moving speed)
3. The cutting-in amount (depth of one cutting operation)

Note : When settings have been made with both the software and the PNC-2300A, the last settings made have priority.

In this manual, these three conditions are called the cutting conditions. The characteristics and points to consider for each of these conditions are as follows.

Item	Characteristics/Points to Consider
Spindle motor revolution speed	The bigger this number, the faster the cutting speed. However, if this number is too large, the work surface may melt or burn due to excessive friction. Conversely, if this number is made smaller, the time taken for cutting becomes too longer. Generally speaking, the entire cutting speed is determined by the cutting edge speed, so the smaller the tool diameter, the higher the spindle revolution speed required. (When performing engraving without rotating the cutting tool, set “REVOLUTION” to “OFF.”) Revolution speed : 5,000—15,000 rpm
Feeding speed	When the feeding speed is high, processing becomes rough and flash marks tend to remain on the cut surface. On the other hand, when the feeding speed is slow, processing takes more time. Be careful because a slower feeding speed does not always result in improved finishing.
Cutting-in amount	When the cutting-in amount is deeper, the cutting speed increases, but the cutting-in amount is limited by the quality of the workpiece. In cases where the required depth can not be cut at once, repeat cutting several times to depth that does not breach the limit.

Manual Setting of Cutting Conditions

The cutting conditions can be set manually according to the method described below.
If the cutting conditions can be set with your current software, this is a faster and more efficient method than manual setting. It makes no difference when you come to construct a program. The following method is appropriate for making delicate halfway adjustments to conditions previously set using software, etc.

Feeding Speed

1 Press the **[MENU]** key to make the following screen appear on the display.

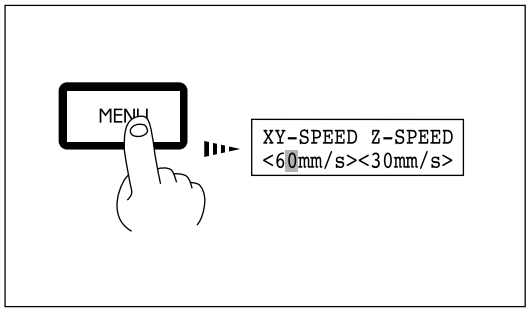

2 Press the [◄] or [►] key to move the blinking cursor ("") to the value for the X-Y axes. To set the machining speed of the head, move the blinking cursor ("") to the value for the Z axis.

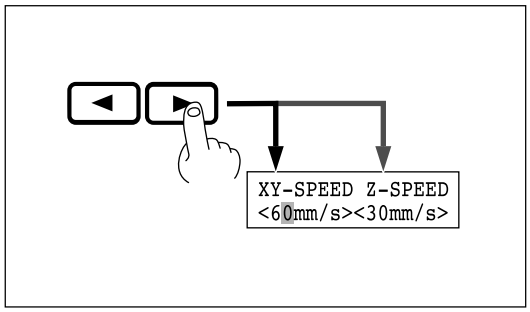

3 Press the **[▲]** or **[▼]** key to set the feed rate.

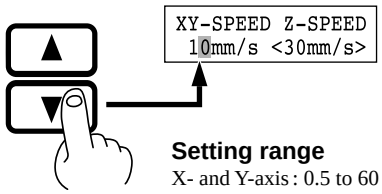

Setting range
X- and Y-axis : 0.5 to 60 mm/sec
Z-axis : 0.5 to 30 mm/sec

4 Press the **[ENTER]** key.

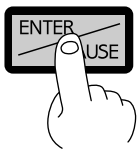

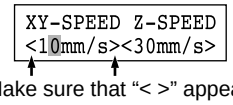

Make sure that “< >” appears.

Spindle Motor Revolution Speed

Rotate the spindle control to set the speed of rotation.

LOW
5,000 rpm

When engraving work piece material such as acrylics that weakens under heat high.

HIGH
15,000 rpm

When engraving work piece material such as aluminum or brass.

Setting range: 5,000 to 15,000 rpm

* RPM : Revolutions Per Minute

Cutting-in Amount

The cutting-in amount is set by setting Z1.
“Setting the cutting-in amount” means to set the Z1 point.

Cutting Condition Setting Examples

The chart below contains reference examples of the appropriate cutting conditions for several types of workpiece material. In the case that the conditions are input using software or when constructing your own programs, set the cutting conditions with reference to the chart. However, because conditions differ depending on cutter sharpness and workpiece hardness, cutting performance may not always be optimal when adhering to the conditions specified below. In such a case, delicate adjustment should be performed at the time of actual cutting.

Workpiece	Cutter (Option)	Spindle revolution speed (RPM)	Cutting-in amount (mm)	XY axis feeding speed (mm/sec.)	Z axis feeding speed (mm/sec.)
Acrylic resin	ZEC-H4032	10000	0.2	15	5
	ZHS-H4400	10000	0.2	15	5
Aluminum	ZEC-U4032	12000	0.05	5	1
	ZDC-D4000	Without rotation	0.1	10	1
	ZDC-D2000	Without rotation	0.1	10	1
Brass	ZEC-U4032	12000	0.05	5	1
	ZDC-D4000	Without rotation	0.1	10	1
	ZDC-D2000	Without rotation	0.1	10	1
Chemical wood	ZEC-H4032	10000	0.4	30	10
	ZHS-H4400	10000	0.5	30	5
Modeling wax (Option)	ZEC-H4032	10000	0.5	30	10
	ZHS-H4400	10000	0.8	30	5

1-11 Setting the Z1 and Z2 Position

The cutter up position (Z2 point) and down position (Z1 point) are normally set with the software. If they cannot be set with your current software then set them manually using the keys on the switch panel.
* The Z0, Z1, and Z2 points can be stored in memory by setting "**Z0/Z1/Z2 MEMORY**" to "**ON**."

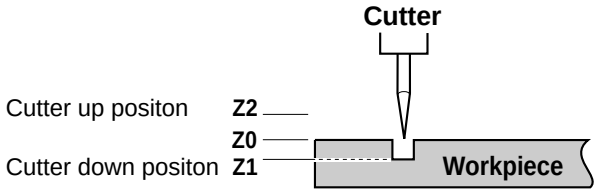

1 Press the **[MENU]** key to make the following screen appear on the display.

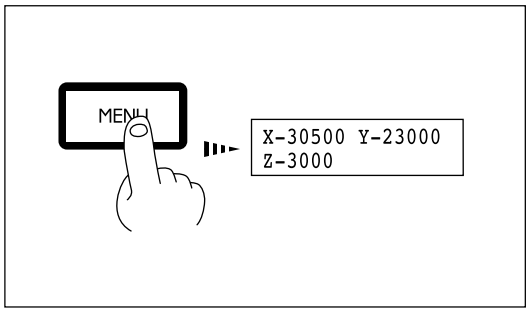

2 Press the **[ENTER]** key to make the following screen appear on the display.

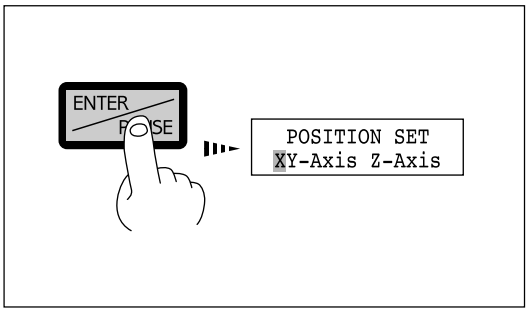

3 Press the **[►]** key to move the blinking cursor ("▯") to "**Z-Axis**," then press the **[ENTER]** key.

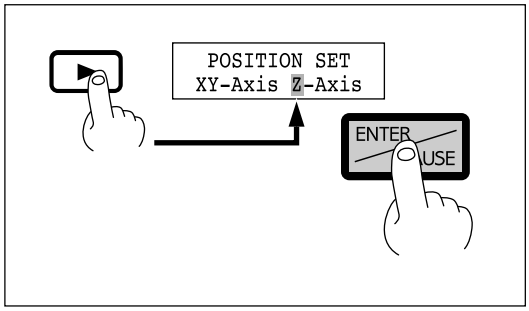

4 Press the **[◄]** key to move the blinking cursor ("▯") to "**Z1**."
When setting the Z2 point, press the **[►]** key to move the blinking cursor ("▯") to "**Z2**."

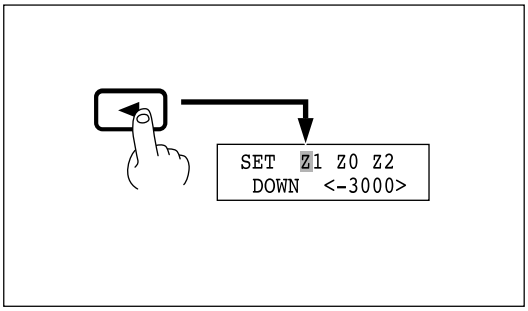

5 Press the arrow keys and the CUTTER UP/DOWN keys to move the cutter to the height where Z1 (or Z2) point is to be set.
When setting Z1, move the cutter to a position away from the loaded workpiece.

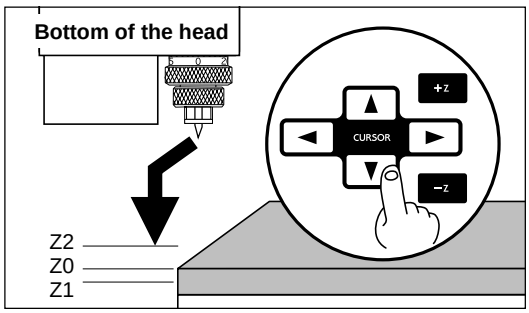

6 Make sure the blinking cursor is on "**Z1**" and press the **[ENTER]** key.

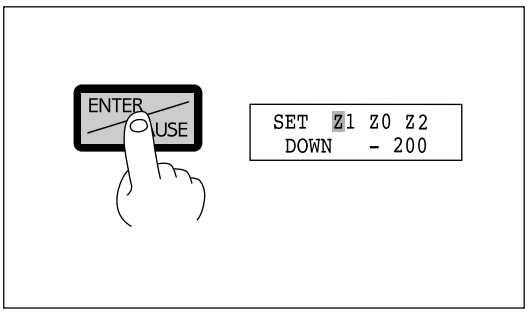

7 Make sure the blinking cursor is on "**Y**" and press the **[ENTER]** key.

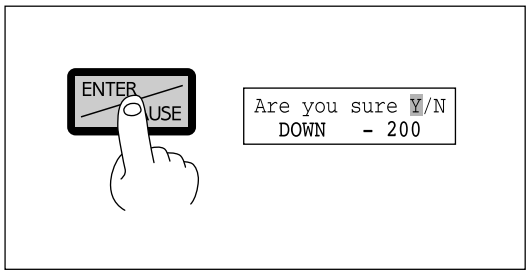

8 Selecting "**Y**" displays the following message. Selecting "**N**" returns to the coordinate display (the screen shown in step 1).

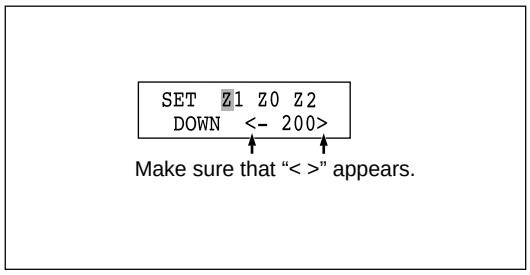

1-12 Sending Cutting Data

NOTICE

Do not operate beyond capacity or subject the tool to undue force.
The tool may break. If machining operation beyond capacity is started inadvertently, immediately press the EMERGENCY STOP switch.

Opening the cover during cutting results in an emergency stop. Any cutting data in use becomes invalid, and cutting cannot be continued.
If the cover must be opened during cutting, first press the **[ENTER/PAUSE]** key to pause the PNC-2300A, then open the cover. After the cover has been closed, cutting resumes when the paused state is canceled.
(The spindle will not rotate while the cover is open.)

The PNC-2300A performs cutting after receiving cutting data from the computer (application).
Data may be output, for example, after it has been created using any of a number of applications, or from driver.
In this section, general matters related to data output are explained. Refer to this section when carrying out data output. For details of the cutting data output method, refer to the operation manual for the application software or driver used.

Setting the Output device

Please select from among the models shown below when making the settings for output device with the application software.

Output model	Instruction system	Command setting on the PNC-2300A	Coordinate unit setting on the PNC-2300A
PNC-2300A	CAMM-GL I	AUTO	0.01 mm
CAMM-2 Series	CAMM-GL II	AUTO	0.01 mm
CAMM-3 Series	CAMM-GL I	AUTO	0.01 mm

* When set to “**AUTO**,” the machine automatically determines whether the mode 1 or mode 2 instruction system is used.

1-13 Finishing

⚠CAUTION

Do not touch the tip of the blade with your fingers.
Doing so may result in injury.

Do not carelessly insert the hands while in operation.
Doing so may result in injury (during manual operation.).

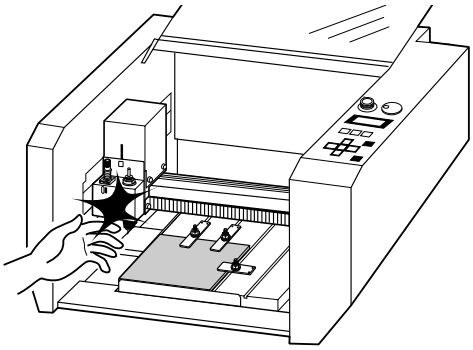

Please use a vacuum cleaner to remove cutting dust.
Do not use any blower like airbrush.
Otherwise, dust spread in the air may harm your health or damage this machine.

Perform dry cutting with no cutting oil.
Such materials can cause fire.

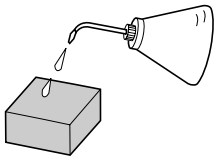

When you're finished, wash your hands to rinse away all cuttings.

After cutting has been finished, detach the cutter, remove the workpiece, and clean away chips.

1 Press the **[MENU]** key to make the following screen appear on the display.

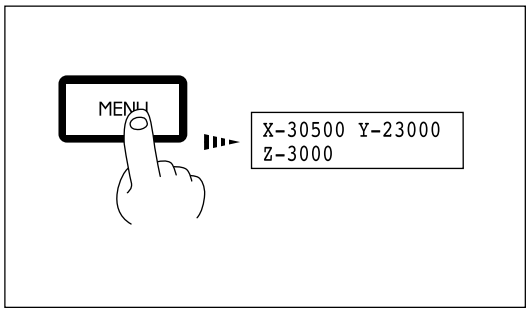

2 Press the arrow keys and the **[+Z]** key to move the bed to a position where the cutter and material can easily be detached.

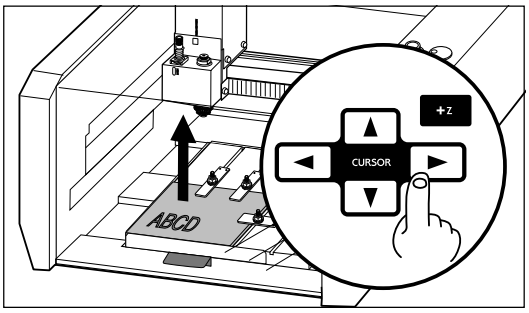

3 Open the cover and detach the cutter.

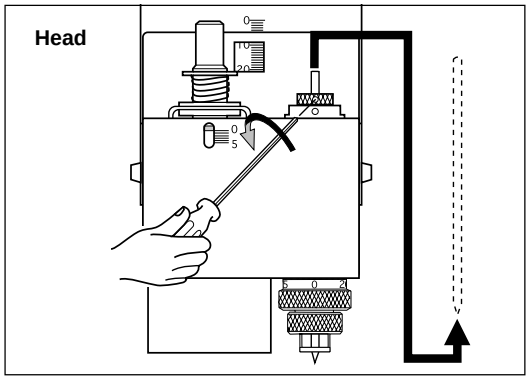

4 Remove the workpiece.

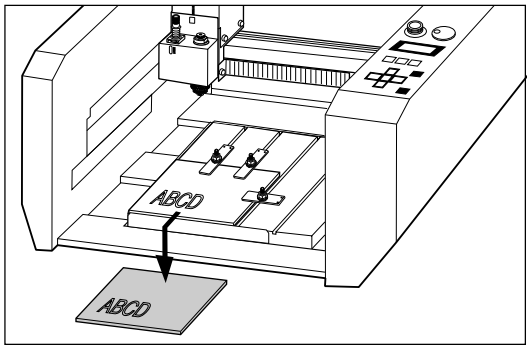

If the material has been secured in place using an adhesive sheet or double-sided tape, peel it off of the bed.

5 Use a commercially available vacuum cleaner to remove chips inside the box.

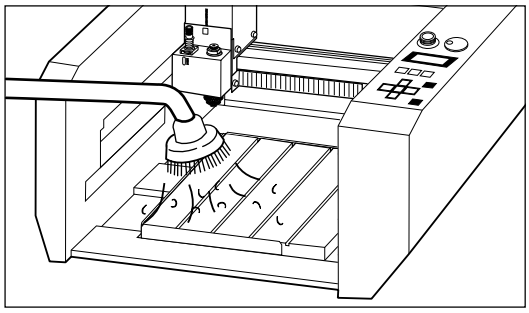

Part 2 User's Reference

2-1 Cutting Area

The maximum cutting area of the PNC-2300A is 305 mm × 230 mm × 30 mm (12" × 9" × 1-1/8"). When converted to coordinate values, this corresponds to (x, y, z) = (30500, 23000, 3000) when the coordinate unit is 0.01 mm, or (x, y, z) = (12200, 9200, 3000) when the coordinate unit is 0.025 mm. Changing the coordinate unit causes only the coordinate units for the X and Y axes to change. The coordinate unit along the Z axis is always 0.01 mm/step.
The actual available cutting area is subject to restrictions according to the length of the attached cutter and the workpiece height; and in some cases it may be larger than the maximum operating area.

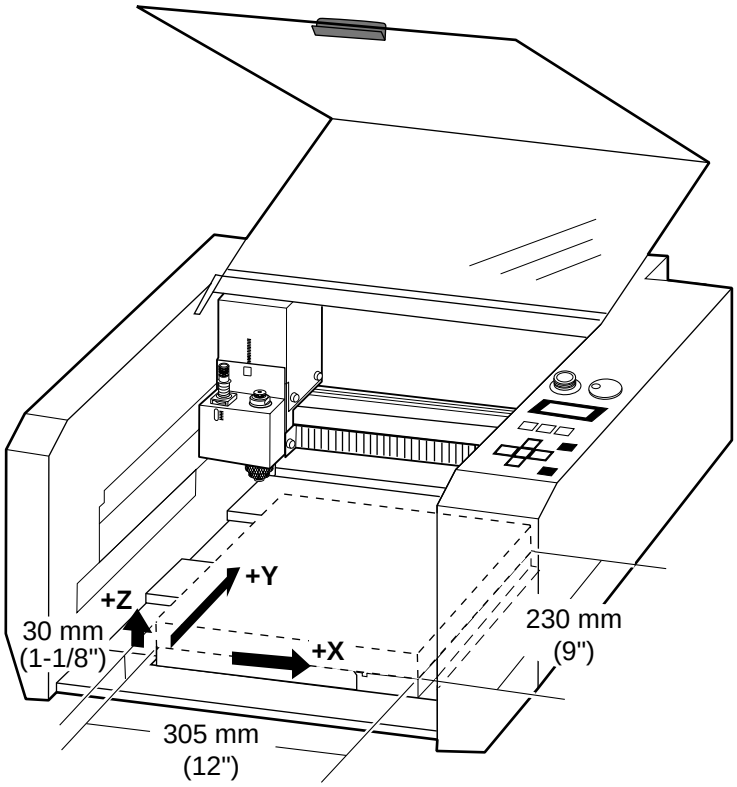

2-2 Operating Each Function

Making Settings with the Liquid-crystal Display

When coordinate values are displayed:

Use the ◄ and ► keys to move along the X axis.
Use the ▲ and ▼ keys to move along the Y axis.
Use the +Z and −Z keys to move along the X axis.

X-30500 Y-23000
Z-3000

Press the ◄ and ► keys to move the blinking cursor (“ ”) and select the setting item.

Press the MENU key to display the next menu.

XY-SPEED Z-SPEED
<60mm/s><30mm/s>

Press the ◄ and ► keys to change the value (or selection choice), and then press the ENTER key to confirm.

The value (or selection choice) enclosed in angled brackets (“< >”) indicates the current setting.

Use the ◄ and ► keys to move the blinking cursor (“ ”) and select the execution item.
Press the ENTER key to execute.

CLEAR REPLOT
I/O OTHERS

Press the ◄ and ► keys to move the blinking cursor (“ ”) and select the setting item.
Press the ENTER key to confirm.

INPUT
PARA SERI<AUTO>

Press the ◄ and ► keys to move the blinking cursor (“ ”) and select the setting item.
Press the ENTER key to confirm.

Changing to Other-language Messages on the Liquid-crystal Display

1 Switch on the power while holding down the **[MENU]** key.

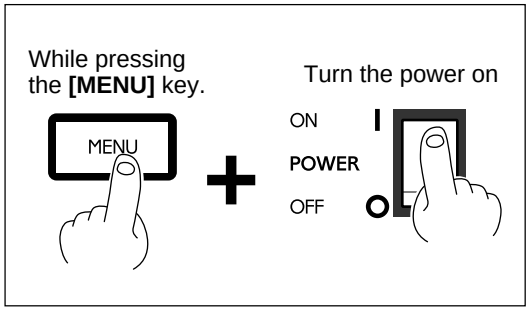

2 Press the **[◄]** key to move the blinking cursor (“ ”) to “**Japanese**,” and then press the **[ENTER]** key.

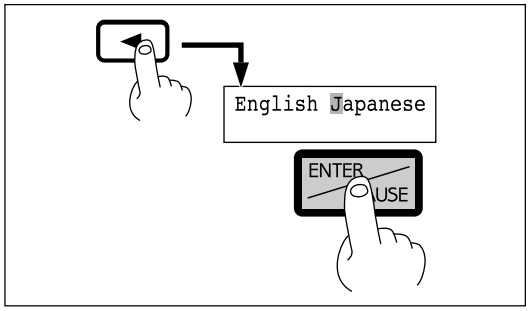

3 Messages on the display now appear in Japanese.

ENTERｷｰ ｦ
ｵｼﾃｸﾀﾞｻｲ

* To return the display to English-language messages, carry out Step 1 again. When the language-selection menu appears (similar to the one in Step 1, but in Japanese), move the cursor to “ｴｲｺﾞ” and press the **[ENTER]** key.

Performing Repeat Cutting

The data buffer is the place where data received from the computer is stored temporarily. (The data in the data buffer can be erased by switching off the power or executing the "**CLEAR**".)
Executing the "**REPEAT**" calls up the cutting data stored in the PNC-2300A's data buffer and executes the replotting procedure.
When replotting is executed, the entire data content of the data buffer is called up. When you perform replotting, clear the data from the data buffer before sending the cutting for replotting from the computer.

1 Press the **[MENU]** key to make the following screen appear on the display.

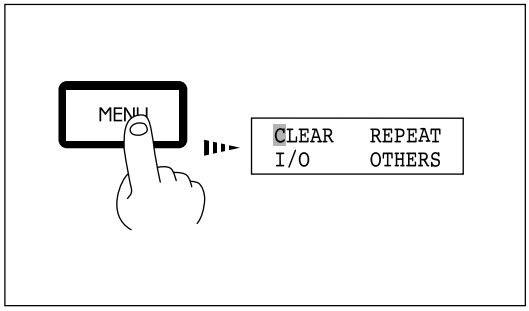

2 Press the **[►]** key to move the blinking cursor ("▮") to "**CLEAR**," then hold down the **[ENTER]** key for 0.5 sec or more. This makes "**CLEAR**" start to flash.

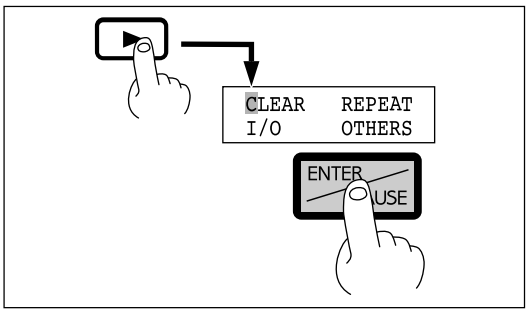

3 Install the cutter and load the material.
After closing the cover, use the software to send cutting data.

4 After cutting has finished, remove the cut material and load a new piece. Set the origin point if necessary.

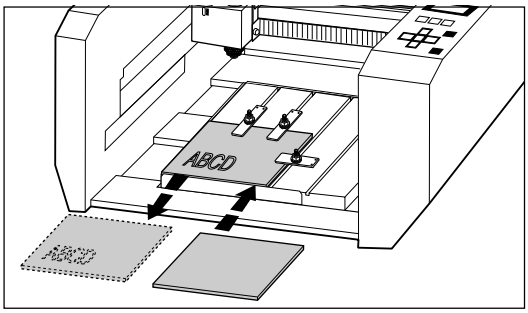

5 Press the **[MENU]** key to make the following screen appear on the display.

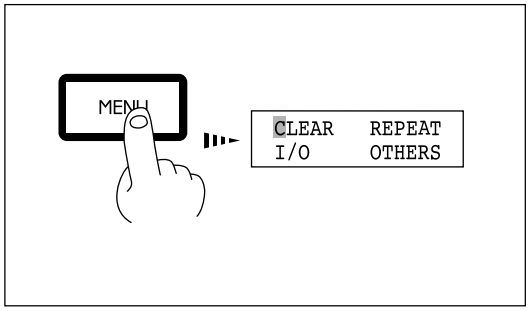

6 Press the **[►]** key to move the blinking cursor ("▮") to "**REPEAT**," and then press the **[ENTER]** key.

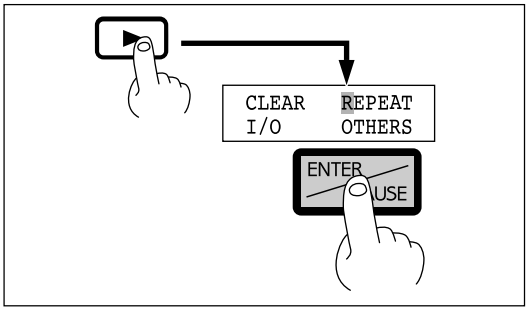

Changing the Feed Rate or Spindle Speed During Cutting

The feed rate and spindle rotating speed set by the software can be changed while cutting is in progress.
This is done by first pausing the PNC-2300A during cutting, then changing the feed rate. However, if the computer subsequently sends a command to change the feed rate, the setting will change as specified by the new command. When set by software or set directly on the PNC-2300A, the setting made last takes precedence.
Spindle speed can be changed at any time. Use the Spindle control to change it.

Changing the Feed Rate

1 Press the **[ENTER/PAUSE]** key while cutting is in progress. One cutting step is performed, after which operation stops. The display changes to show the following message.

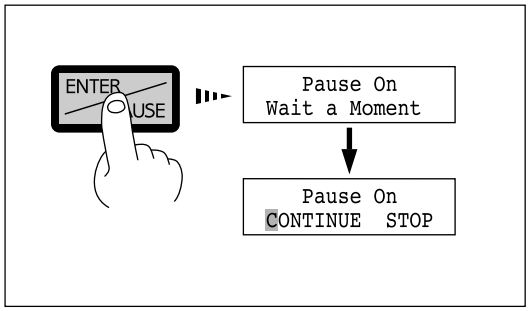

2 Press the **[MENU]** key to make the following screen appear on the display.

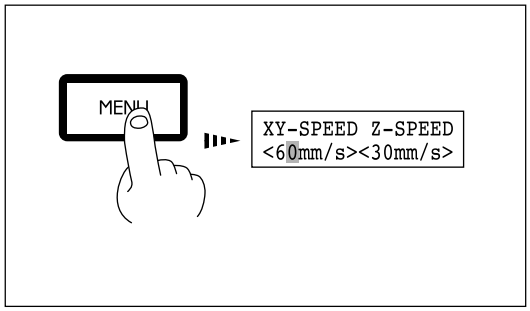

3 Press the **[◄]** or **[►]** key to move the blinking cursor ("▮") to "**XY-SPEED**."
To set the lowering speed of the head, move the blinking cursor ("▮") to "**Z-SPEED**."

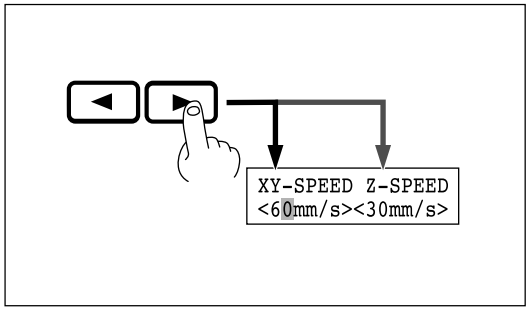

4 Press the **[▲]** or **[▼]** key to set the feed rate.

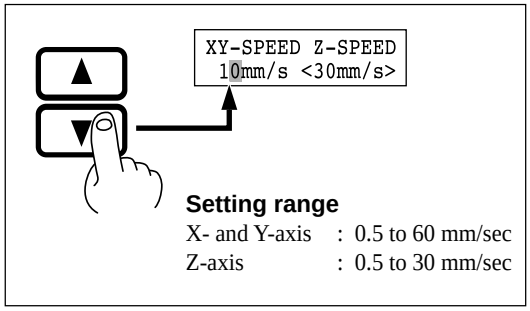

Setting range

X- and Y-axis	:	0.5 to 60 mm/sec
Z-axis	:	0.5 to 30 mm/sec

5 Press the **[ENTER]** key.

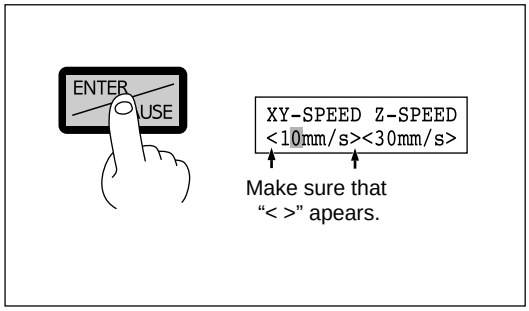

Make sure that "< >" apears.

Canceling the Paused State to Resume Cutting

After changing the feed rate, cancel the paused state. Cutting then resumes at the new feed rate or spindle speed.

1 Press the **[MENU]** key to make the following screen appear on the display.

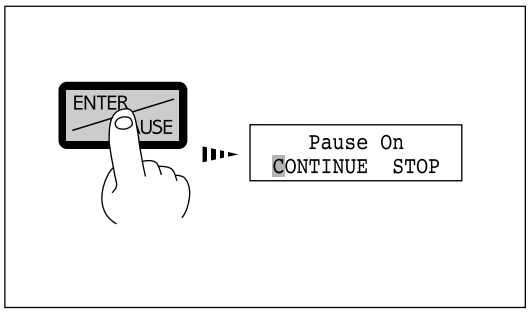

2 Press the **[►]** key to move the blinking cursor ("▮") to "**CONTINUE**," and then press the **[ENTER]** key.

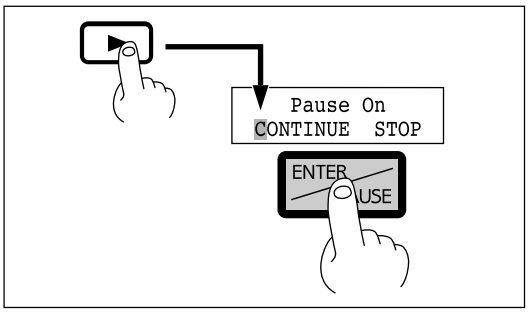

Stopping the Cutting Process

In the case that you begin cutting and then find that you have sent the wrong cutting data, perform the following operation.

1 Press the **[ENTER/PAUSE]** key while cutting is in progress. One cutting step is performed, after which operation stops. The display changes to show the following message.

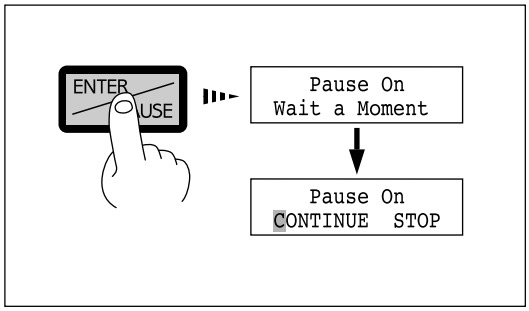

2 Use the software to stop data output.

3 Press the **[►]** key to move the blinking cursor ("▮") to "**STOP**," and then press the **[ENTER]** key.

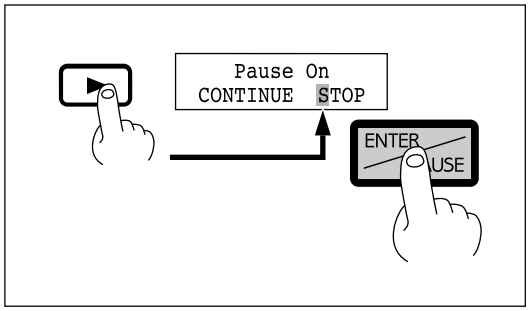

2-3 Explanation of the Display Menus

```
X-30500 Y-23000
Z-3000
```

This shows the current position of the cutter (in coordinates). The coordinate values indicate the home position as the origin point on the X and Y axes, and the Z0 point as the origin point on the Z axis.
It is possible to move from this menu to submenus for setting the X- and Y-axis origin point (home position), the Z-axis origin point (Z0), the cutter-up position (Z2), the cutter down position (Z1).

```
POSITION SET
XY-Axis Z-Axis
```

```
SET HOME POS.
30500   20500
```

This sets the X- and Y-axis origin point (home position). Use the arrow keys to move the cutter to the desired location for the home position, and press the **[ENTER]** key.
For details, see “Setting the Origin (Home Position)”.

```
SET  Z1 Z0 Z2
 DOWN   -3000
```

This sets the Z-axis origin point (Z0), cutter-up position (Z2), and cutter down position (Z1). Move the blinking cursor (“ ”) on the display to “**Z0**,” “**Z1**,” or “**Z2**,” align the tip of the cutter to the height to be set, then press the **[ENTER]** key.
For details, see “Setting the Z0 Position” or “Setting the Z1 and Z2 Position”.

```
XY-SPEED Z-SPEED
<60mm/s><30mm/s>
```

This shows the X/Y-axis feed rate and the Z-axis feed rate.
Move the blinking cursor (" ") on the display to the value for the X-Y axes or for the Z axis, use the **[▲]** or **[▼]** key to set the feed rate, then press the **[ENTER]** key.
For details, see “Feeding Speed”.

```
HOME VIEW
Z1   Z0   Z2
```

“**HOME**”
This moves the cutter to the current home position (XY origin point).

“**VIEW**”
This raises the cutter to its highest point and moves the XY table to the front left.

“**Z1**”
This starts the spindle motor and moves the cutter to the current cutter-down position. Spindle rotation and cutter changing do not take place while the cover is open.

“**Z0**”
This moves the cutter to the current Z-axis origin point.

“**Z2**”
This moves the cutter to the current cutter-up position.

```
CLEAR    REPEAT
I/O      OTHERS
```

Go to the submenus for “**I/O**”.

Go to the submenus for “**OTHERS**”.

“**CLEAR**”
This deletes any cutting data stored in the data buffer.

“**REPEAT**”
This loads cutting data that is stored in the data buffer and performs cutting. This makes it possible to cut multiple copies of the same shape.
For details, see “Performing Repeat Cutting”.

“**I/O**”
This changes to the menu for the connection interface and setting communication parameters for serial communication.

“**OTHERS**”
This changes to the menu for making other settings.

I/O

```
INPUT
PARA SERI<AUTO>
```

"**I/O**"
Default : AUTO
This sets the type of interface connected to the computer. When set to "**AUTO**," the interface type (parallel or serial) is determined automatically. However, serial communication parameters (baud rate, parity checking, stop bit, data bit, and handshaking settings) are not determined and must be set.

```
STOP
<1>      2
```

"**STOP**"
Default : 1
This sets the number of stop bits when using a serial connection. Either 1 bit or 2 bits can be selected.

```
DATA
7      <8>
```

"**DATA**"
Default : 8
This sets the data bit length when using a serial connection. A length of either 7 bits or 8 bits can be selected.

```
PARITY
<NONE>ODD EVEN
```

"**PARITY**"
Default : NONE
This makes the setting for parity checking when using a serial connection. The available selections are no parity ("**NONE**"), even parity ("**EVEN**"), and odd parity ("**ODD**").

```
BAUDRATE
<9600>  4800
```

"**BAUDRATE**"
Default : 9600
This sets the baud rate when using a serial connection. The available selections are 9600, and 4800 bps.

```
HANDSHAKE
<HARD>  XON/OFF
```

"**HANDSHAKE**"
Default : HARD
This sets the handshaking mode when using a serial connection. Either hardwire (HARD) handshaking or Xon/Xoff control can be selected.

OTHERS

```
  REVOLUTION
<ON>      OFF
```

"**REVOLUTION**"
Default : ON
When set to "**OFF**," cutting can be performed without rotating the spindle.

```
  OVER AREA
<CONTINUE>PAUSE
```

"**OVER AREA**"
Default : CONTINUE
This selects the action when the cutter returns from a coordinate outside the cutting range to a coordinate inside the range. (The cutter cannot actually be moved outside the cutting range, but the PNC-2300A's internal processing handles this as if it had.)
"**CONTINUE**": Operation is not paused upon return to the cutting range. Cutting continues without interruption.
"**PAUSE**" : Operation is paused when the cutter returns to the cutting range.

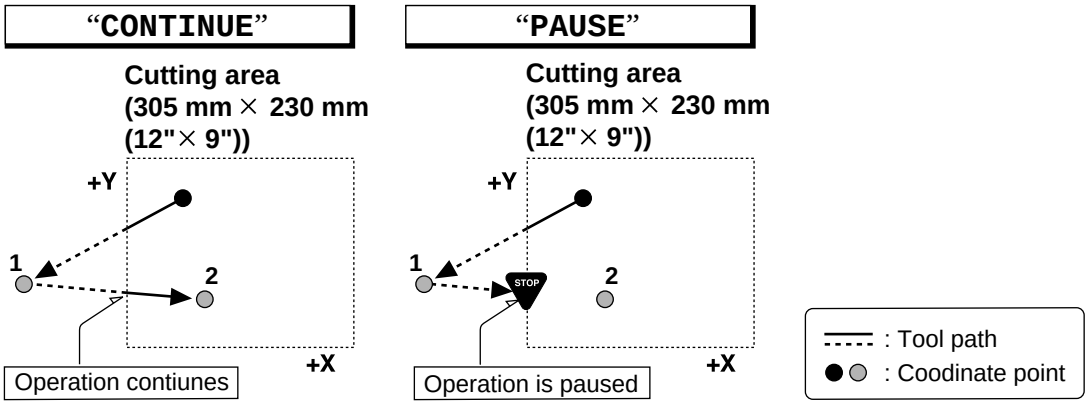


```
  SMOOTHING
<ON>      OFF
```

"**SMOOTHING**"
Default : ON
Smoothing is a function for cutting smooth arcs and circles.
This is set to "ON" when shipped from the factory. To disable smoothing, set this to "OFF".

```
Z0/Z1/Z2 MEMORY
  ON      <OFF>
```

"**Z0/Z1/Z2 MEMORY**"
Default : ON
This toggles the Z0, Z1 and Z2 points memory function on or off. When set to "**ON**," the Z0, Z1 and Z2 points remain in memory even after the power is switched off.

```
  RESOLUTION
<0.01mm>0.025mm
```

"**RESOLUTION**"
Default : 0.01 mm/step
This selects the unit used for coordinates. Either 0.01 mm/step or 0.025 mm/step can be selected. Changing the coordinate unit causes only the coordinate units for the X and Y axes to change. The coordinate unit along the Z axis is always 0.01 mm/step.

```
 COMMAND MODE
1    2   <AUTO>
```

"**COMMAND MODE**"
Default : AUTO
This selects the instruction system for data sent from the computer. When set to "**AUTO**," the instruction system is determined automatically. If automatic determination is not made correctly, find out what instruction system the application software (or driver) uses for data that is sent, and change this setting to "**1**" or "**2**." Refer to the manual for the software to determine the instruction system of sent data.

```
REVOLUTION TIME
      10 hours
```

"**REVOLUTION TIME**"
This shows the rotation time of the spindle. The spindle rotation time cannot be returned to "0" (zero).
For details, see "Display of Spindle Rotation Time".

2-4 Maintenance

⚠CAUTION

Please use a vacuum cleaner to remove cutting dust.
Do not use any blower like airbrush.
Otherwise, dust spread in the air may harm your health or damage this machine.

Before attempting to replace the motor brushes or the spindle motor, stop cutting operations on the PNC-2300A and allow to stand for an hour or so.
Failure to do so may result in burns from the hot motor.

NOTICE When cleaning the PNC-2300A, make sure that the main unit's power OFF.

Cleaning the Main Unit

When the main unit becomes dirty, use a dry cloth to wipe it.

Cleaning Inside the Cover

After cutting work is completed, use a vacuum cleaner to clean the PNC-2300A main unit and the surrounding area of cutting dust.
If a large amount of cutting dust builds up while cutting work is in progress, then press the [ENTER/PAUSE] key to pause cutting, open the cover, and clean out any buildup within the unit. When you're finished cleaning, close the cover and press the [ENTER/PAUSE] key to resume cutting.

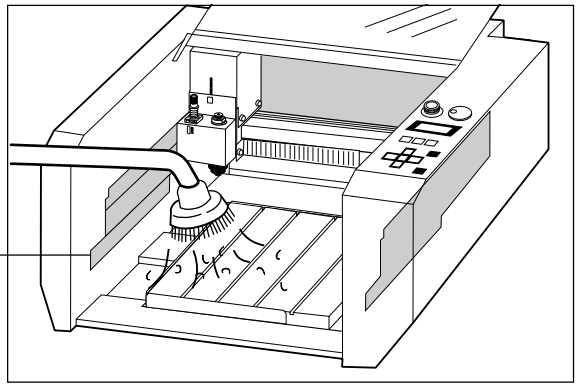

Cleaning the Interior of the Bellows

A large amount of cutting dust may accumulate when end-mill cutting or the like is performed. After cutting has finished, clean the interior of the bellows.

Loosen the left-hand and right-hand screws on the head, and move the bellows to one side. Use a vacuum cleaner to clean the buildup of cuttings inside the bellows.

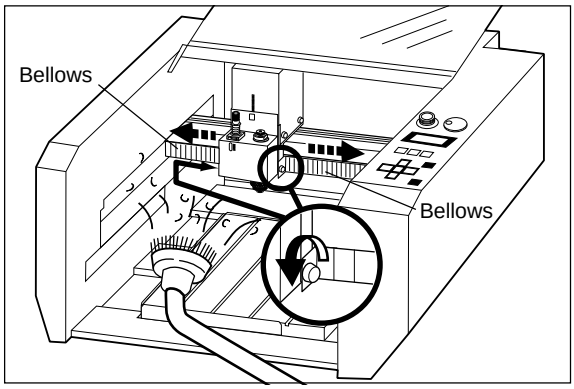

Replacing the Motor Brushes

The brushes for the spindle motor should be replaced periodically. As a general guide, replacement after every 1,000 hours of spindle rotation is suggested. For an explanation of how to check the spindle rotation time, see “Display of Spindle Rotation Time” .
The useful life of the motor ends when the replaced motor brushes wear out (after approximately 2000 hours of spindle operation). When this happens, replace it with a new spindle motor (optionally available).

1 Turn the power OFF.

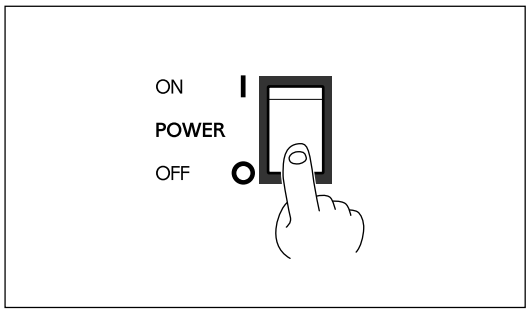

2 Loosen the screws on the left and right, and remove the spindle cover.

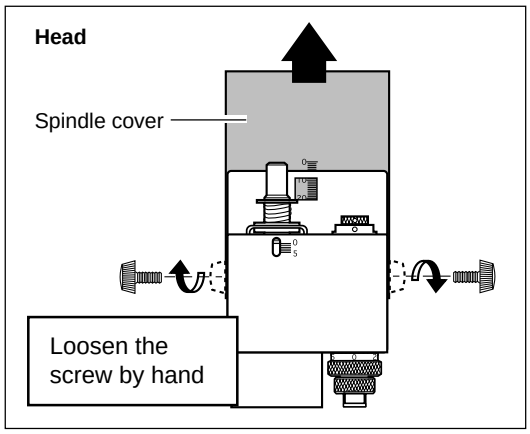

3 Use a commercially available flathead screwdriver to remove the front and rear brush covers.

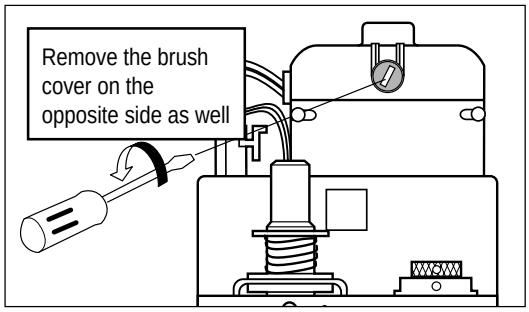

4 Remove the old motor brush and replace with a new one.

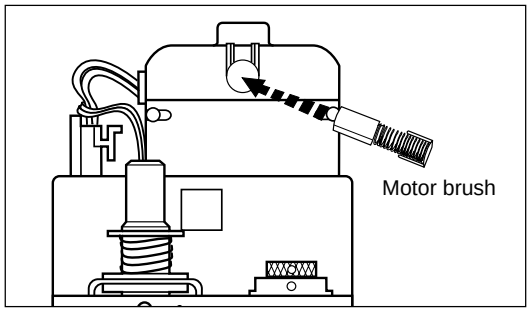

5 Reattach the brush covers.

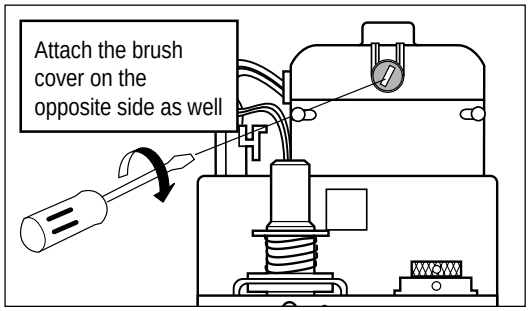

6 Reattach the spindle cover.

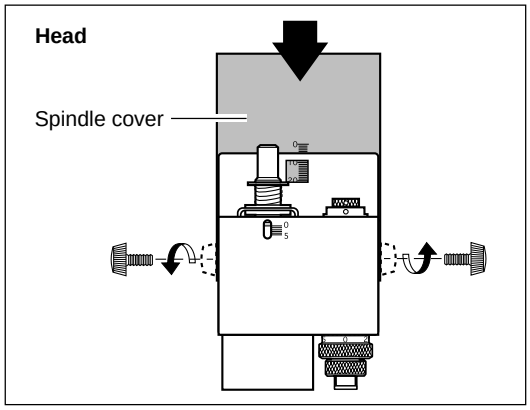

Maintenance tasks that can be carried out by the user are cleaning of the main unit, cleaning inside the cover, cleaning inside the bellows, and replacement of the motor brushes. Oil supply and other maintenance are not required.

Checking the Spindle Motor

Operate the spindle motor alone, with no cutter installed or material loaded. If the speed of rotation is uneven, or if you hear an unusual noise, please consult your authorized Roland DG Corp. dealer or service center.

1 Turn the power ON.

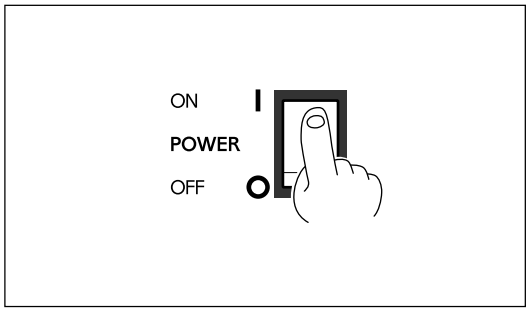

2 Display the screen shown below and make sure that "**REVOLUTION**" is set to "**ON**."

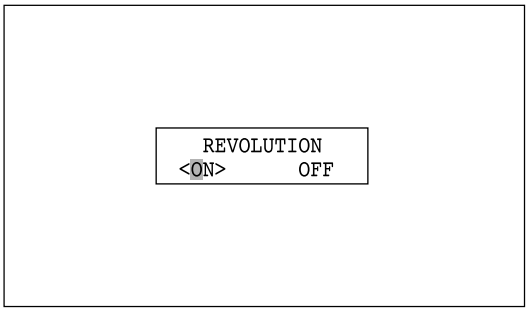

3 Close the cover.

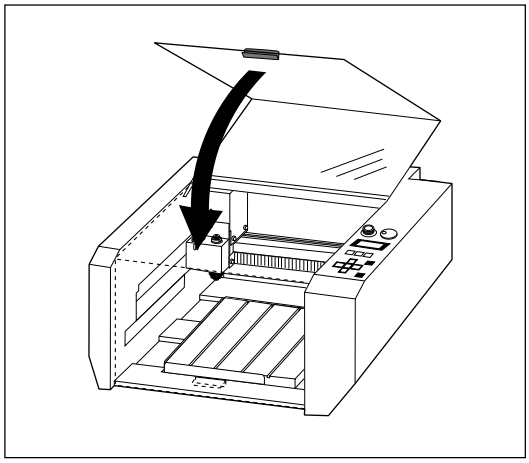

4 Press the **[SPINDLE ON/OFF]** key to rotate the spindle.

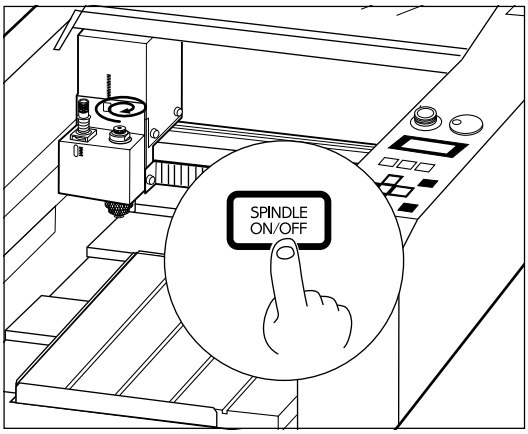

Display of Spindle Rotation Time

The PNC-2300A has a function for the displaying the total rotation time of the spindle. The service life of the unit can be extended by carrying out periodic inspection. As a general guide, this inspection should be performed after every 500 hours of use.

1 Press the **[MENU]** key to make the following screen appear on the display.

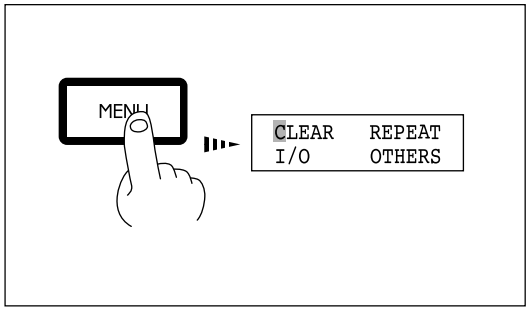

2 Press the **[►]** key to move the blinking cursor ("▮") to "**OTHERS**," and then press the **[ENTER]** key.

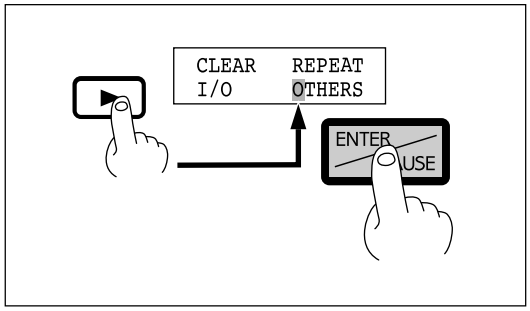

3 Press the **[MENU]** key to make the following screen appear on the display.

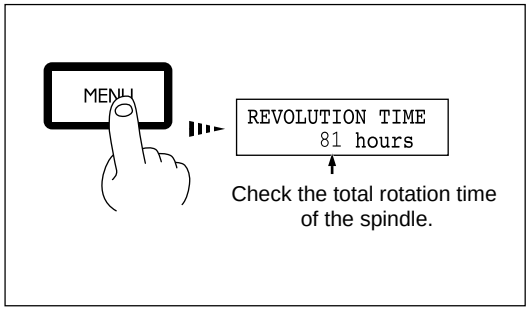

Recommended Service Checking

The PNC-2300A is a precision machine. In order to maintain it safely for operation over the long term, we recommend that it should be checked by a qualified serviceman. There is a charge for this service. Please take note of this in advance.

Maintenance to Be Performed by a Service Technician

- Inspection and maintenance at every 500 hours of spindle rotation time (refer to "Display of Spindle Rotation Time")
- Checking and adjustment of the spindle belt
- Replacement of consumable parts (spindle belt, spindle motor, spindle unit)

2-5 Troubleshooting

When the PNC-2300A does not work...

Is the cover open?	The PNC-2300A will not operate when the cover is open. Close the cover and try again.
Is operation paused?	If the **[ENTER/PAUSE]** key is pressed while the machine is in operation, the message "**Pause On**" appears on the display and operation is paused. Choose "**CONTINUE**" and press the **[ENTER/PAUSE]** key again to cancel the paused state.
Do the PNC-2300A's connection parameter settings match the settings for the computer?	Refer to "Setting the Connection Parameters" to make the correct settings.
Is the power for the PNC-2300A switched on? Has the connection cable come loose?	Make sure the PNC-2300A is powered up. Make sure the connection cable is plugged in securely with no looseness at either end.
Is the correct connection cable being used?	The type of connection cable varies according to the computer being used. Also, some application software requires the use of a special cable. Make sure the correct cable is being used.
Is the correct output device setting (or driver selection) made for the application software?	Refer to the documentation for the application software to make the correct output device setting (or driver selection) for the application software.

When the spindle does not rotate ...

Is "REVOLUTION" set to "OFF?"	If "**REVOLUTION**" is set to "**OFF**," the spindle will cut without rotating. Change the setting for "**REVOLUTION**" to "**ON**."

The power does not come on...

Is the EMERGENCY STOP switch set to STOP (○)?	If the EMERGENCY STOP switch has been depressed, the power will not come on when the power switch is turned on. Set the EMERGENCY STOP switch to RELEASE (▎).
Has the power cord come loose?	Make sure the power cord is plugged in securely with no looseness at either end.

Cutting depth varies in places (deep and shallow cuts)

Is the workpiece flexing?	Check the setting and clamping of the workpiece.
Is the workpiece height uneven because of the double-sided tape used for securing it was stuck on poorly?	Check how well the material is secured and reload it.

* Cutting to the same depth, even of workpieces of different thicknesses can be done if the depth regulator nose is used.

Cutting line varies in places

Is the workpiece vibrating because the adhesive double sided tape was stuck on poorly?	Check where the double-sided tape is affixed and reload the material.

Engraving cannot be performed at the desired location

Is there a mistake in the home position setting?	Refer to “Setting the Origin (Home Position)”. Use these procedures to set the home position correctly.
Was there a position error when the workpiece was replaced?	Check that workpiece position setting is correct.

The letters have been cut too deep (or too shallow) and cannot be read

Is the cutter mounted securely?	Refer to “Loading a Cutter” to install the cutter securely.
Is there a mistake in the Z position?	Increase (or decrease) the “**Z1**” setting as needed.

When moving the cutter while in the up position the cutter tip contacts or pulls on the workpiece

Is there a mistake in the Z position?	Refer to "Setting the Z1 and Z2 Position”. Increase the “**Z2**” setting as needed.

Burrs are present on grooves made during cutting

Is the cutter mounted securely?	Refer to “Loading a Cutter” to install the cutter securely.
Is the tip of the cutter worn?	When the tip of the cutter is worn, replace with a new one.
Is the cutter feed speed too fast (spindle rotation speed too slow).	Refer to “Feeding Speed” to find the correct feed speed “**XY-SPEED**” and “**Z-SPEED**”, and adjust the spindle rotation speed by referring to “Spindle Motor Revolution Speed”.

The cutting finish is unsatisfactory

Separating the process of cutting the material into two stages makes for engraved results which are more attractive. After rouging out the general shape with “rough engraving,” “finishing” is performed to produce the final results.
For instance, to cut letters to a depth of 0.3 mm, first of all rough cut to a depth of 0.25 mm. Then continue exactly the same kind of cutting to a depth of 0.3 mm.

2-6 Error Messages

An error message will appear if incoming data has any of the errors listed in table. Since the error is shown in the display for informational purposes, the data transfer continues and you are allowed to perform the next operation.
To get the error message to go away, press the **[MENU]** key.
Note that even though the error message is no longer displayed after you press the **[MENU]** key, the PNC-2300A will retain in memory the fact that the error occurred. To clear the error, switch the power off and back on. Occurrence of an error may make correct engraving impossible.

Error message	Meaning
`Command Not Recognized`	Appears if an instruction that the PNC-2300A cannot interpret is sent. This error is generated if an instruction from the “mode2” set is sent when the unit has been set to recognize “mode1,” or viceversa. Change the setting for the recognized instruction set, using the control panel, and this error should no longer occur.
`Wrong Number of Parameters`	Appears if the number of parameters differs from the permissible number.
`Bad Parameter`	Appears if the value specified for a parameter is out of the permissible range.
`Unknown Character Set`	Appears if an unusable character is specified.
`Position Overflow`	Appears if the polygon buffer is full.
`I/O Err: Output Request Overlap`	Appears if an output instruction is sent from the computer during execution of a previous output instruction. More precisely, there is a certain amount of delay between the moment an output instruction is given and the instant actual output begins. This error message appears if the new output request arrives during this delay time. (The delay time can be set using the [ESC].M instruction.)
`I/O Err: Command Not Recognized`	Appears if a device control instruction that the PNC-2300A cannot interpret is sent.
`I/O Err: Wrong Parameter`	Appears if an invalid parameter has been specified for a device control instruction.
`I/O Err: Out of Parameter range`	Appears if the value for a device control instruction parameter exceeds the permissible limit.
`I/O Err:Termiva-tin Error`	Appears if the number of parameters for a device control instruction is more than that permissible.
`I/O Err:Framing/ Parity Error`	Appears if a framing error, parity error, or overrun error occurs at the time of data reception. (There is a problem with one of these settings: Baud Rate, Parity, Stop Bits, or Data Bits. The protocol settings for the PNC-2300A must be made correctly in order to match the settings your computer is set to use.)
`I/O Err: Buffer Overflow`	Appears if the I/O buffer has overflowed. (There is a problem with the connecting cable, or the settings for Handshaking. Make sure you are using a cable appropriate for the computer being used. Also, check that the setting for Handshaking is correct.)
`I/O Err:Indeter-minate Erro`	Appears if an indeterminate communication error other than the I/O errors described above has occurred.

2-7 Other Messages

Besides error messages related to commands or communication parameters, the following messages may also appear on the display.

Message	Meaning
CAN'T REPEAT TOO BIG DATA	This message appears if repeat cutting is attempted when the cutting data exceeds 1 MB. The data cannot all fit in the PNC-2300A's data buffer, so repeat cutting cannot be performed.
CAN'T REPEAT COVER OPEN	This message appears if cutting is attempted while the cover is open.
CAN'T REPEAT BUFFER EMPTY	This message appears if repeat cutting is attempted when the data buffer is empty. Send cutting data before performing repeat cutting.
EMERGENCY STOP SPINDLE LOCK	The PNC-2300A stops automatically if an excessive load is placed on the spindle during cutting. The message shown at right appears at this time. The overload may be due to excessive hardness of the material, an excessive amount of cutting, or a feed rate that is too fast. Investigate the problem and eliminate the cause of the overload. The message at left also appears when the motor brushes have worn out or the useful life of the motor has ended. When this happens, refer to "Checking the Spindle Motor" and operate the spindle alone, with no cutter installed or material loaded. If the spindle does not rotate, the motor brushes are worn out or the motor has reached the end of its useful life. If the motor brushes now installed in the motor have not been replaced, it means the motor brushes are worn out. Replace with new motor brushes (see "Replacing the Motor Brushes). The useful life of the motor ends when the replaced motor brushes wear out (after approximately 2000 hours of spindle operation). When this happens, replace it with a new spindle motor (optionally available). The error can be cancelled by switching the power to the unit off and then on again.
EMERGENCY STOP COVER OPEN	If the cover is opened during cutting, an emergency stop is performed and this message appears. All cutting data stored in the PNC-2300A is deleted, and cutting cannot be continued. If this message appears, stop sending data from the computer. Switch the power off and back on again to cancel the error.
OPERATING ERROR CAN'T FIND LIMIT	When the power is switched on, a message may be displayed indicating that buildup of cuttings has obstructed movement of the head. Clean away all cuttings from around the table. Switch the power off and back on again to cancel the error.
EMERGENCY STOP Z AXIS ERROR	This message may be displayed when the material is too hard to be cut. Switch the power off and back on again to cancel the error. When using with the Z adjust screw released (such as when using the depth-regulator nose), tighten the screw before switching the power on again.

2-8 List of CAMM-GL I Instructions

A “CAMM-GL I Programmer's Manual” is available for separate purchase for those wishing to create their own programs for this machine. For further information, please contact the nearest Roland DG Corp. dealer or distributor.

*1: $-(2^{26}-1)$—$+(2^{26}-1)$
*2: 0—$+(2^{26}-1)$
*3: $-(2^{26}-1)°$—$+(2^{26}-1)°$

mode 1

Instruction	Format	Parameter		Range [Default]
@ Input Z1 & Z2	@ Z1, Z2	Z1	Position on Z1	-3000—0 [0]
		Z2	Position on Z2	0—+3000 [0]
H Home	H	None		
D Draw	D x1, y1, x2, y2, ... , xn, yn	xn, yn	Absolute coordinate	* 1
M Move	M x1, y1, x2, y2, ... , xn, yn	xn, yn	Absolute coordinate	* 1
I Relative Draw	I Δx1, Δy1, Δx2, Δy2, ... , Δxn, Δyn	Δxn, Δyn	Relative coordinate	* 1
R Relative Move	R Δx1, Δy1, Δx2, Δy2, ... , Δxn, Δyn	Δxn, Δyn	Relative coordinate	* 1
L Line Type	L p	p	Line pattern	-5—+5 [Solid line]
B Line Scale	B l	l	Pitch length	* 2 [1.5% of (P2-P1)]
X Axis	X p, q, r	p	Coordinate axis	0, 1
		q	Tick interval	* 1
		r	Repeat number	1—32767
P Print	P c1c2.....cn	cn	Character string	
S Alpha Scale	S n	n	Character size	0—127 [3]
Q Alpha Rotate	Q n	n	Rotation angle	0—3 [0]
N Mark	N n	n	Number of special symbol	1—15
U User	U n	n		1 or 2 [1]
C Circle	C x, y, r, θ1, θ2 (, θd)	x, y	Center coordinate	* 1
		r	Radius	* 1
		θ1	Start angle	* 3
		θ2	Completion angle	* 3
		θd	Resolution	* 3 [5°]
E Relative Circle	Er, θ1, θ2 (, θd)	r	Radius	* 1
		θ1	Start angle	* 3
		θ2	Completion angle	* 3
		θd	Resolution	* 3 [5°]
A Circle Center	A x, y	x, y	Center coordinate	* 1 [x=0, y=0]
G A + Circle	G r, θ1, θ2 (, θd)	r	Radius	* 1
		θ1	Start angle	* 3
		θ2	Completion angle	* 3
		θd	Resolution	* 3 [5°]
K A + %	K n, l1, l2	n	Angle of segment line	* 1
		l1	Length to end of segment line	* 1
		l2	Length to beginning of segment line	* 1
T Hatching	T n, x, y, d, t	n	Hatching pattern	0—3
		x, y	Length of rectangle side	* 1
		d	Intervals between hatching lines	* 1
		t	Hatching angle	1—4
V Velocity Z-axis	V f	f	Feed rate for Z axis	0—30 [mm/sec] [2 [mm/sec]]
F Velocity X,Y-axis	F f	f	Feed rate for X and Y axis	0—60 [mm/sec] [2 [mm/sec]]
Z XYZ Axis Simultaneous Feed	Z x1, y1, z1, ... , xn, yn, zn	xn, yn	XY coordinate	* 1
		zn	Z coordinate	* 1
O Output Coordinate	O	None		
W Dwell	W t	t	Dwell time	0—32767 [msec] [0 [msec]]
!	! n	n	Turns or stops the spindle motor	-32767—+32767 [0]
^ Call mode2	^ [mode2] [parameter] ..... [parameter] [;]			

mode 2

Instruction	Format	Parameter		Range [Default]
AA Arc Absolute	AA x, y, θc (, θd);	x, y θc θd	Center coordinate Center angle Chord tolerance	* 1 * 3 * 1 [5°]
AR Arc Relative	AA Δx, Δy, θc (, θd);	Δx, Δy θc θd	Center coordinate Center angle Chord tolerance	* 1 * 3 * 1 [5°]
CA Alternate Character Set	CA n; CA	n	Character set No.	0—59, 99 [0]
CI Circle	CI r (, θd) ;	r θd	Radius Chord tolerance	* 1 * 3 [5°]
CP Character Plot	CP nx, ny ; CP ;	nx, ny	Number of character in X or Y-axis direction	* 1 * 1
CS Standard Character Set	CS n; CS ;	n	Character set No.	0—59, 99 [0]
DF Default	DF ;	None		
DI Absolute Direction	DI run, rise ; DI ;	run rise	X-axis direction vector Y-axis direction vector	-128—+128 [1] -128—+128 [0]
DR Relative Direction	DR run, rise ; DR ;	run rise	X-axis direction vector Y-axis direction vector	-128—+128 [1] -128—+128 [0]
DT Defined Label Terminator	DT t ;	t	Label terminator	[[ETX] (03h)]
EA Edge Rectangle Absolute	EA x, y ;	x, y	Absolute coordinates of rectangle	* 1
ER Edge Rectangle Relative	ER Δx, Δy ;	Δx, Δy	Relative coordinates of rectangle	* 1
EW Edge Wedge	EW r, θ1, θc (, θd) ;	r θ1 θc θd	Radius Start angle Center angle Chord tolerance	* 1 * 3 * 3 * 3 [5°]
FT Fill Type	FT n (, d (,θ)) ; FT ;	n d θ	Pattern Spacing Angle	1—5 [1] * 2 [1% of (P2x-P1x)] * 3 [0°]
IM Input Mask	IM e ; IM ;	e	Error mask value	0—255 [223]
IN Initialize	IN ;	None		
IP Input P1 & P2	IP P1x, P1y (, P2x, P2y) ;	P1x, P1y P2x, P2y	XY coordinates of P1 XY coordinates of P2	* 1 * 1
IW Input Window	IW LLx, LLy, URx, URy ;	LLx, LLy URx, URy	Lower left coordinates Upper right coordinates	* 1 * 1
LB Label	LB c1c2.....cn [label terminator]	cn	Character string	
LT Line Type	LT n (, l) ; LT ;	n l	Pattern number 1 pitch length	0—6 [Solid line] * 2 [%] [1.5 % of (P2-P1)]
OA Output Actual Position	OA ;	None		
OC Output Commanded Position	OC ;	None		
OE Output Error	OE ;	None		
OF Output Factor	OF ;	None		
OH Output Hard-Clip Limits	OH ;	None		
OI Output Identification	OI ;	None		
OO Output Option Parameter	OO ;	None		
OP Output P1 & P2	OP ;	None		
OS Output Status	OS ;	None		
OW Output Window	OW ;	None		
PA Plot Absolute	PA x1, y1 (, x2, y2....., xn, yn) ; PA ;	xn, yn	Absolute XY coordinates	* 1
PD Pen Down	PD x1, y1 (, x2, y2....., xn, yn) ; PD ;	xn, yn	XY coordinates	* 1
PR Plot Relative	PR Δx1, Δy1 (, Δx2, Δy2....., Δxn, Δyn) ; PR ;	Δxn,Δyn	Relative XY coordinates	* 1
PT Pen Thickness	PT d ; PT ;	d	Tool width (diameter)	0—5 [mm] [0.3 [mm]]
PU Pen Up	PU x1, y1 (, x2, y2....., xn, yn) ; PU ;	xn, yn	XY coordinates	* 1
RA Shade Rectangle Absolute	RA x, y ;	x, y	Absolute coordinates of rectangle	* 1
RR Shade Rectangle Relative	RR Δx,Δy ;	Δx,Δy	Relative coordinates of rectangle	* 1
SA Select Alternate Set	SA ;	None		
SC Scaling	SC Xmin, Xmax, Ymin, Ymax ; SC ;	Xmin, Ymin Xmax, Ymax	User XY coordinates of P1 User XY coordinates of P2	* 1 * 1
SI Absolute Character Size	SI w. h ; SI ;	w h	Character width Character height	-30—+30 [cm] [0.19 [cm]] -30—+30 [cm] [0.27 [cm]]
SL Character Slant	SL tanθ; SL ;	tanθ	Character slant	* 1 [0]

Instruction	Format	Parameter		Range [Default]
SM Symbol Mode	SM s ; SM ;	s	Character or symbol	21h—3Ah, 3Ch—7Eh [Clears symbol mode]
SR Relative Character Size	SR w, h ; SR ;	w h	Character width Character height	-128—+128 [%] [0.75 [%]] -128—+128 [%] [1.5 [%]]
SS Select Standard	SS ;			
TL Tick Length	TL lp (, ln) ; TL ;	lp ln	Tick length in positive direction Tick length in negative direction	-128—+128 [%] [0.5 [%]] -128—+128 [%] [0.5 [%]]
UC User Defined Character	UC (c,) Δx1, Δy1 (,(c,) Δx2, Δy2...Δxn, Δyn) UC ;	c Δxn,Δyn	Tool control value Units of movement	-128—-99, +99—+128 -99<Δxn, Δyn<99
VS Velocity Select	VS s ; VS ;	s	Feed rate for X and Y axis	0—60 [mm/sec] [2 [mm/sec]]
WD Write to Display	WD c1c2 ... cn; WD;	cn	Character	CHR$ (32) — CHR$ (127), CHR$ (160) — CHR$ (223)
WG Shade Wedge	WG r, θ1, θc (, θd) ;	r θ1 θc θd	Radius Start angle Center angle Chord tolerance	* 1 * 3 * 3 * 3 [5°]
XT X-Tick	XT ;	None		
YT Y-Tick	YT ;	None		

mode 1, mode 2 common instructions

Instruction	Format	Parameter		Range [Default]
!DW Dwell	!DW t [terminator]	t	Dwell time	0—32767 [0]
!IO Input Home Position	!IO x, y [terminator]	x, y	Coordinates of home position (designate by machine coordinate)	* 1
!MC Motor Control	!MC n [terminator] !MC [terminator]	n	Motor ON/OFF switching	-32768—32767 [motor ON]
!NR Not Ready	!NR [terminator]	None		
!OZ Output Z-coordinate	!OZ [terminator]	None		
!PZ Set Z1&Z2	!PZ z1 (, z2) [terminator]	z1 z2	Z1 coordinates Z2 coordinates	-3000—0 [0] 0—3000 [0]
!VZ Velocity select Z-axis	!VZ s [terminator]	s	Feed rate (Z axis)	0—30 [mm/sec] [2 [mm/sec]]
!ZM XYZ Axis Simultaneous Feed	!ZM z [terminator]	z	Z coordinate	-3000—0
!ZO Set Z0	!ZO z [terminator]	z	Z machine coordinate	-3000—0
!ZZ Z	!ZZ x1, y1, z1, ... , xn, yn, zn [terminator]	xn, yn zn	XY coordinate Z coordinate	* 1 * 1

2-9 Device Control Instructions

The Device Control instructions determine how communication between the PNC-2300A and the computer will be handled using the RS-232C interface; and also are employed when relaying to the computer the status of the PNC-2300A. Some of them can be used to format the output for CAMM-GL I instructions.
A Device Control instruction is composed of three characters: ESC (1Bh), a ".", and an uppercase letter. There are also two types of device control instructions: one carries parameters and the other does not.
Parameters can be omitted. Semicolons, " ; " are used as separators between parameters. A semicolon without parameters means that parameters have been omitted. Device Control instructions with parameters require a terminator to indicate the conclusion of the instruction. A colon " : " is used as the terminator, and it must not be omitted.
No terminator is necessary for Device Control instructions without parameters.

Instruction	Format	Parameter	Range ([ ] is default)	Explanation
Handshake Instructions				
ESC .B Output Remaining Buffer Capacity	[ESC].B	None		Outputs the current remaining buffer capacity to the computer.
ESC .M Set Handshake Output Specifications (1)	[ESC].M<P1>;<P2>;<P3>;<P4>;<P5>;<P6>:	P1: Delay time P2: Output trigger character P3: Echo terminator P4: Output terminator P5: Output terminator P6: Output initiator	0-32767 (msec) [0 (msec)] [0 (Sets nothing)] [0 (Sets nothing)] [13 ([CR])] [0 (Sets nothing)] [0 (Sets nothing)]	Sets handshake output specifications. Note: When you specify some values to <P4> and <P5>, always set 0 to <P6>. When you specify some value to <P6>, always set 0 to <P5>.
ESC .N Set Handshake Output Specifications (2)	[ESC].N<P1>;<P2>;<P3>; ••••• ;<P11>:	P1: Intercharacter delay P2-P11 : Xoff character (for Xon/Xoff) Immediate response character (for ENQ/ACK)	0-32767 (msec) [0 (msec)] [All 0 (Sets nothing)]	Sets an intercharacter delay, and also an Xoff character for performing the Xon/Xoff handshake.
ESC .H Sets ENQ/ACK Handshake Mode1	[ESC].H<P1>;<P2>;<P3>; •••••••• ;<P12>:	P1: The number of bytes for data block P2: ENQ character P3-P12 : ACK character (only when <P2> is set)	0-15358 (byte) [80 (byte)] [0 (Sets nothing)] [All 0 (Sets nothing)]	When receiving the ENQ character set by <P2>, compares the value set by <P1> and the remaining buffer capacity, and returns the ACK character to the host computer when the remaining buffer capacity is larger. The [ESC].H with no parameter performs a dummy handshake.
ESC .I Set Xon/Xoff Handshake and ENQ/ACK Handshake Mode2	[ESC].I<P1>;<P2>;<P3> ; •••••••• ;<P12>:	P1: Limit of the remaining buffer capacity (for Xon/Xoff) The number of data block bytes (for ENQ/ACK (mode2)) P2: ENQ character (for ENQ/ACK (mode2)) 0 (for Xon/Xoff) P3-P12 : Xon character(for Xon/Xoff) ACK character (for ENQ/ACK (mode2))	0-15358 (byte) [80 (byte)] [0 (Sets nothing)] [All 0 (Sets nothing)]	Used for performing the Xon/Xoff handshake and the ENQ/ACK handshake mode 2. The [ESC].I instruction with no parameter performs a dummy handshake. In a dummy handshake, always returns the ACK character to the host computer, regardless of the remaining buffer capacity, when receiving the ENQ character.
ESC .@ Controls DTR	[ESC].@ P1;P2:	P1: Ignored P2: DTR signal control	0-255 [1]	Controls the DTR signal (No. 20 pin of RS-232C). An even number parameter (e.g. 0) always sets the DTR signal to High without performing the hardware handshake. An odd number parameter (e.g. 1) performs the hardware handshake and controls the DTR signal according to the remaining buffer capacity.
Status Instructions				
ESC .O Outputs the Status of Buffer, Pause	[ESC].O	None		Outputs the status codes of PNC-2300A shown in the table below.

Code	Meaning
0	Data remaining in buffer.
8	Buffer empty.
16	Data remaining in buffer. PNC-2300A being paused (Pause On being displayed).
24	Buffer empty. PNC-2300A being paused (Pause On being displayed).

Instruction	Format	Parameter	Range ([ ] is default)	Explanation
ESC .E Output RS-232C Error Code	[ESC].E	None		Outputs an error code related to RS-232C interface (see the table below), and clears the error simultaneously. At the same time, the error being displayed is canceled.

Error code	Possible cause and action
0	No I/O errors
10	Cause: after execution of an output command, other output instructions are sent before the output was not completed. Action: let the computer to read the PNC-2300A output by the output instruction and then send another output instruction.
11	Cause: an error occurs in a device control instruction. Action: correct your program.
13	Cause: parameters are overflowing. Action: correct your program.
14	Cause: the number of the parameters set is more than specified or a colon ':' was not used to terminate. Action: correct your program.
15	Cause: framing error, parity error or over-run error at the time of data receipt . Action: match the communication protocols of both computer and PNC-2300A (baud rate, data bit length, stop bit length).
16	Cause: the I/O buffer overflows. Action: This error does not occur when hardware handshake is performed, but may occur when software handshake is performed. If this error occurs, check the remaining buffer capacity of the PNC-2300A and send less data than the remaining buffer capacity.

ESC .L Output I/O buffer size	[ESC].L	None		PNC-2300A outputs the size of the I/O buffer to the computer when receiving this instruction. It usually outputs 1024 (bytes).
Abort Instructions				
ESC .J Abort Device Control Instruction	[ESC].J	None		Aborts both the currently executed device control instruction and output.
ESC .K Abort CAMM-GL I Instruction	[ESC].K	None		Continues to execute the CAMM-GL I instruction in operation, aborts other incoming CAMM-GL I instructions and clears the data buffer.
ESC .R Initialize Device Control Instruction	[ESC].R	None		Initializes all settings established by the device control instructions. Execution of [ESC].R brings the same states as the following device control instructions are executed. [ESC].J, [ESC].M:, [ESC].N:, [ESC].H:, [ESC].I: and [ESC].@:

2-10 Display Menus Flowchart

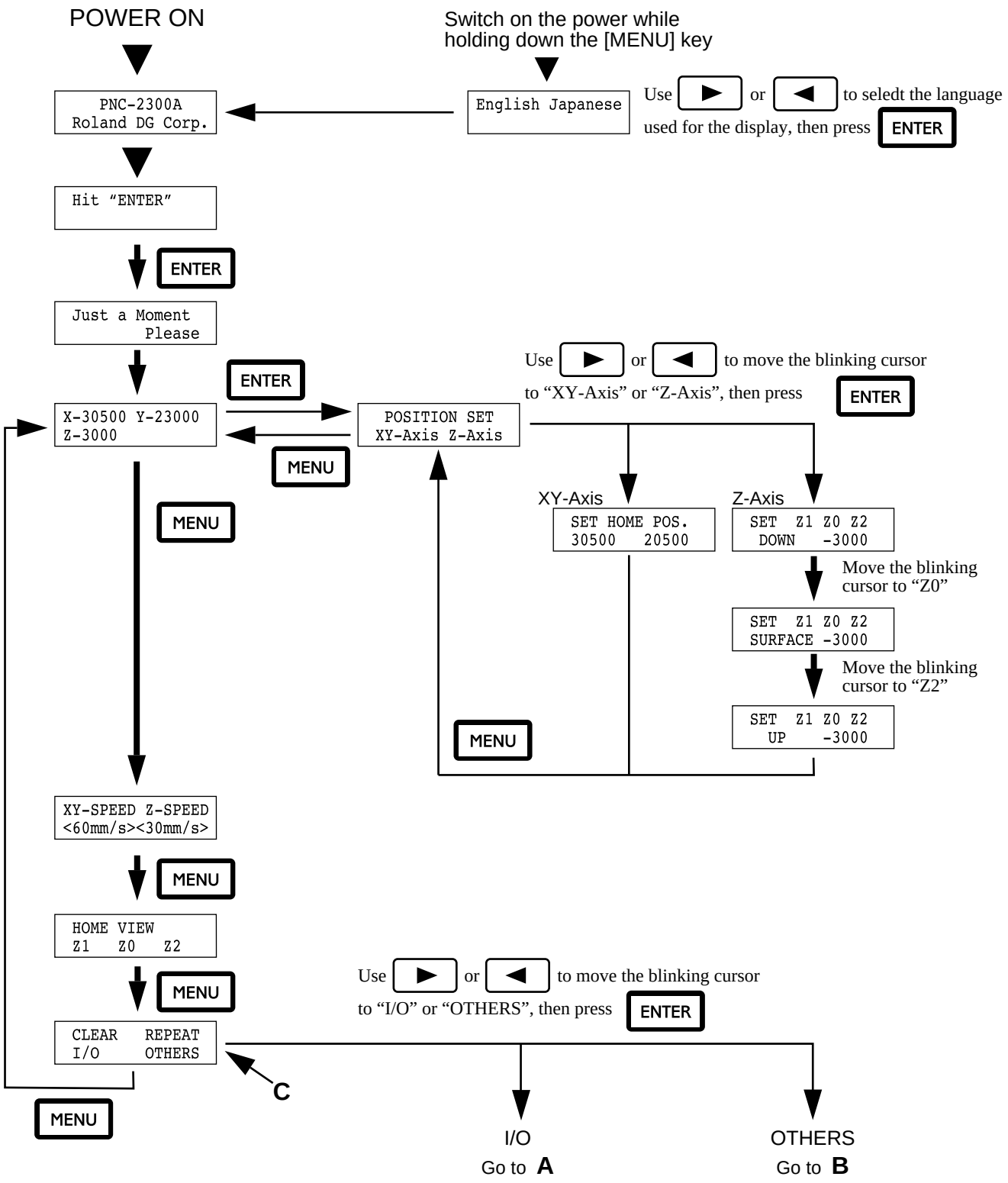

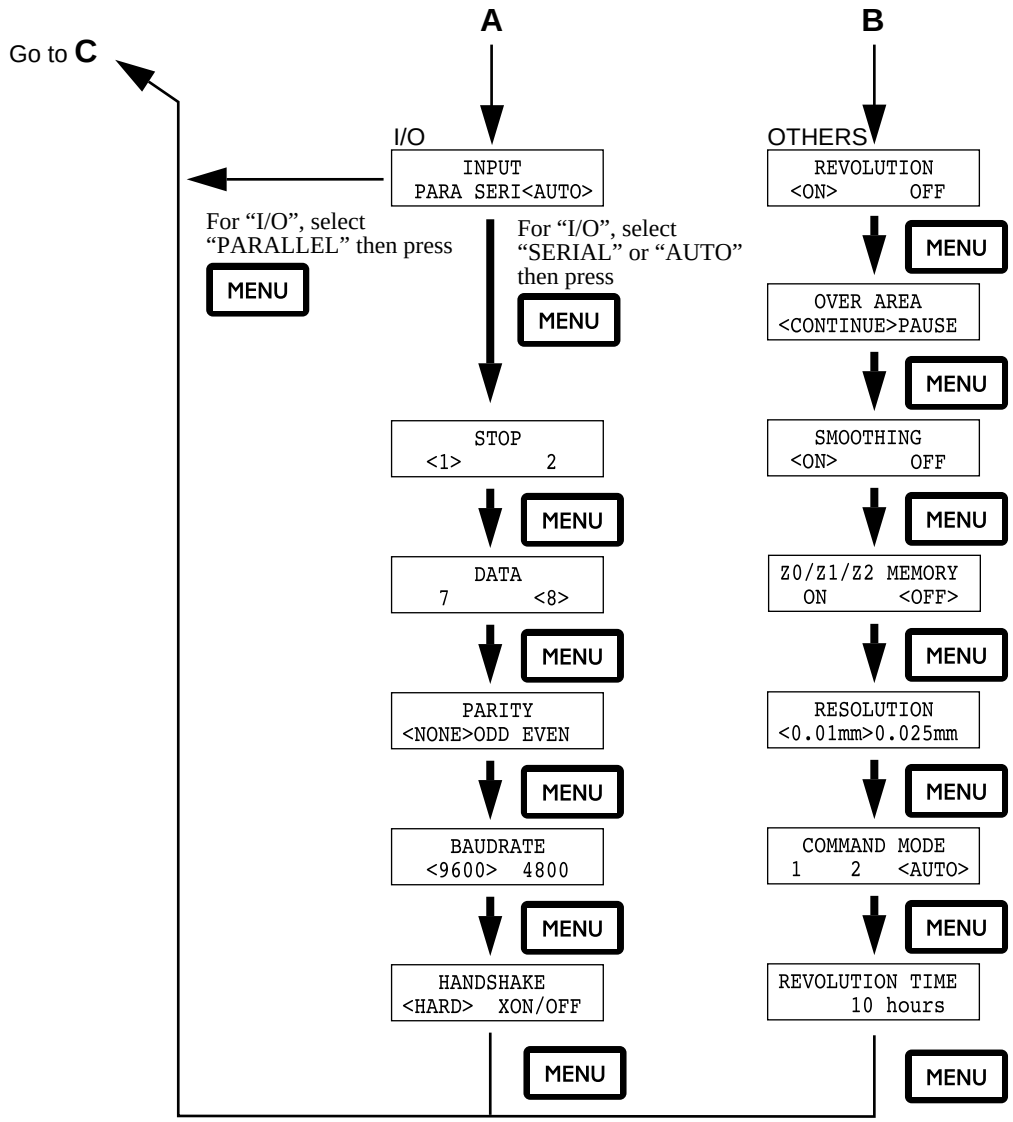

Menu Flowchart When Paused

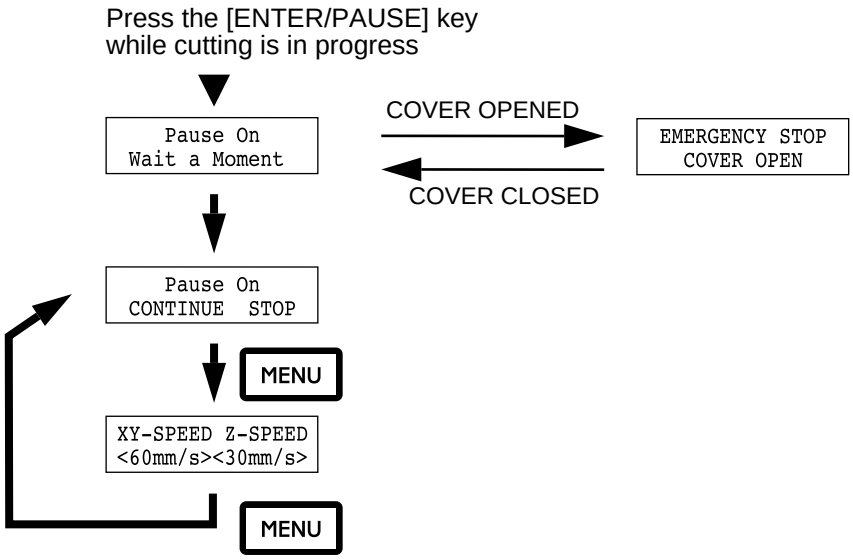

2-11 List of Options

Tools

Item	No.	Description		
Engraving tools	ZEC-H2010	High speed steel	ϕ3.175 x 110 (L) x 0.10 (W)	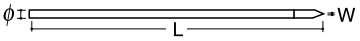
	ZEC-H2032		ϕ3.175 x 110 (L) x 0.32 (W)	
	ZEC-H2050		ϕ3.175 x 110 (L) x 0.50 (W)	
	ZEC-H2075		ϕ3.175 x 110 (L) x 0.75 (W)	
	ZEC-H4010		ϕ4.36 x 155 (L) x 0.10 (W)	
	ZEC-H4032		ϕ4.36 x 155 (L) x 0.32 (W)	
	ZEC-H4050		ϕ4.36 x 155 (L) x 0.50 (W)	
	ZEC-H4075		ϕ4.36 x 155 (L) x 0.75 (W)	
	ZEC-U2032	Cemented carbide	ϕ3.175 x 110 (L) x 0.32 (W)	
	ZEC-U2050		ϕ3.175 x 110 (L) x 0.50 (W)	
	ZEC-U4032		ϕ4.36 x 155 (L) x 0.32 (W)	
	ZEC-U4050		ϕ4.36 x 155 (L) x 0.50 (W)	
Flat tools	ZHS-H2100	High speed steel	ϕ3.175 x 110 (L) x 1.0 (W)	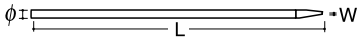
	ZHS-H2150		ϕ3.175 x 110 (L) x 1.5 (W)	
	ZHS-H2200		ϕ3.175 x 110 (L) x 2.0 (W) x 3.0 (ℓ)	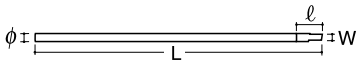
	ZHS-H2250		ϕ3.175 x 110 (L) x 2.5 (W) x 3.5 (ℓ)	
	ZHS-H2300		ϕ3.175 x 110 (L) x 3.0 (W) x 4.5 (ℓ)	
	ZHS-H4100		ϕ4.36 x 155 (L) x 1.0 (W)	
	ZHS-H4150		ϕ4.36 x 155 (L) x 1.5 (W)	
	ZHS-H4200		ϕ4.36 x 155 (L) x 2.0 (W) x 3.0 (ℓ)	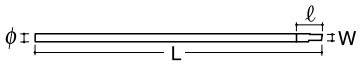
	ZHS-H4250		ϕ4.36 x 155 (L) x 2.5 (W) x 3.5 (ℓ)	
	ZHS-H4300		ϕ4.36 x 155 (L) x 3.0 (W) x 4.5 (ℓ)	
	ZHS-H4350		ϕ4.36 x 155 (L) x 3.5 (W) x 5.5 (ℓ)	
	ZHS-H4400		ϕ4.36 x 155 (L) x 4.0 (W) x 6.0 (ℓ)	
Diamond Scraper	ZDC-D2000	Diamond	ϕ3.175 x 110 (L)	
	ZDC-D4000		ϕ4.36 x 155 (L)	
Drills	ZMD-H2080	High speed steel	ϕ3.175 x 110 (L) x 0.8 (D) x 5.0 (ℓ)	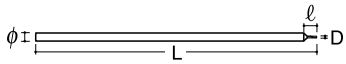
	ZMD-H2100		ϕ3.175 x 110 (L) x 1.0 (D) x 5.0 (ℓ)	
	ZMD-H2150		ϕ3.175 x 110 (L) x 1.5 (D) x 6.0 (ℓ)	
	ZMD-H4080		ϕ4.36 x 155 (L) x 0.8 (D) x 5.0 (ℓ)	
	ZMD-H4100		ϕ4.36 x 155 (L) x 1.0 (D) x 5.0 (ℓ)	
	ZMD-H4150		ϕ4.36 x 155 (L) x 1.5 (D) x 6.0 (ℓ)	

Unit : mm
ϕ : Cutting tool diameter
L : Cutting tool length
W : Blade width
D : Blade diameter
ℓ : Effective blade length

Others

Item	No.	Description	
Collet set	ZC-23	Diameter 6 mm, 5 mm, 4 mm, and 3 mm collets: 1 each	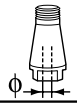
	ZC-23-6	Diameter 6 mm collet: 1	
	ZC-23-6.35	Diameter 6.35 mm collet: 1	
Vacuum table	ZV-23A	Vacuum table: 1	
Center vise	ZV-23C	Center vise: 1	
Spindle unit	ZS-23	Spindle unit: 1	
Spindle motor	ZM-23	Spindle motor: 1	

2-12 Specifications

PNC-2300A	
Table size	305 mm x 230 mm (12" x 9")
Max. cutting area	305 mm (X) x 230 mm (Y) x 30 mm (Z) (12" (X) x 9" (Y) x 1.18" (Z))
Feed rate	X, Y-axis : Max. 3600 mm (141") /min. Z-axis : Max. 1800 mm (70.8") /min.
Software resolution	0.01 mm (0.00394") /step or 0.025 mm (0.000984") /step (XY axis only)
Mechanical resolution	X, Y and Z-axis : 0.00125 mm (0.0000492") /step (micro-step control)
Spindle motor	30 W (DC motor)
Revolution speed	5,000—15,000 rpm
Tool chuck	Cutter holder and collet system
Interface	Parallel (in compliance with the specification of Centronics) Serial (under RS-232C standard)
Buffer size	1 MB (960 Kbyte for replot buffer)
Instruction system	CAMM-GL I (mode1, mode2)
Control keys	MENU, ENTER/PAUSE, SPINDLE TEST ON/OFF, ▲, ▼, ◄, ►, +Z, -Z, SPINDLE CONTROL, EMERGENCY STOP switch
Source	1.8 A / 117 V 0.9 A / 220—230 V 0.9 A / 230—240 V
Acoustic noise level	During no-load operation : 60 dB (A) or less Standby mode : 30 dB (A) or less (According to ISO 7779)
External dimensions	592 mm (W) x 530 mm (D) x 357 mm (H) (23-5/16" (W) x 20-7/8" (D) x 14-1/16" (H)) When cover is open: 592 mm (W) x 530 mm (D) x 728 mm (H) (20-7/8" (W) x 21-7/8" (D) x 28-11/16" (H))
Weight	28.5 kg (62.8 lb.)
Operation temperature	5—40°C (41—104°F)
Operation humidity	35—80 % (no condensation)
Accessories	Power cord: 1, Depth regulator nose: 1, Character cutter (ϕ3.175 mm) : 1, Wrenches: 2, Tool Holder (for ϕ4.36 mm) : 1, Collet (for ϕ4.36 mm) : 1, Tool Holder (for ϕ3.175 mm) : 1, Collet (for ϕ3.175 mm): 1, Hexagonal screw driver: 1, Spare tool securing screw: 1, Adhesive sheet: 1, Clamps: 3, Vacuum adapter set: 1, Motor brushes : 2, User's manual: 1, Roland Software Package CD-ROM: 1

Interface specification

[Parallel]	
Standard	In compliance with the specification of Centronics
Input signal	$\overline{\text{STROBE}}$ (1BIT), DATA (8BIT)
Output signal	BUSY (1BIT), $\overline{\text{ACK}}$ (1BIT)
I/O signal level	TTL level
Transmission method	Asynchronous
[Serial]	
Standard	RS-232C specification
Transmission method	Asynchronous, duplex data transmission
Transmission speed	4800, 9600 (Selected using panel keys.)
Parity check	Odd, Even, None (Selected using panel keys.)
Data bits	7 or 8 bits (Selected using panel keys.)
Stop bits	1 or 2 bits (Selected using panel keys.)

Parallel connector (in compliance with specifications of Centronics)

Signal number	Terminal number		Signal number
NC	36	18	HIGH**
HIGH*	35	17	GND
NC	34	16	GND
GND	33	15	NC
HIGH*	32	14	NC
NC	31	13	HIGH*
GND	30	12	GND
GND	29	11	BUSY
	28	10	$\overline{\text{ACK}}$
	27	9	D7
	26	8	D6
	25	7	D5
	24	6	D4
	23	5	D3
	22	4	D2
	21	3	D1
	20	2	D0
	19	1	$\overline{\text{STROBE}}$

Pin connection

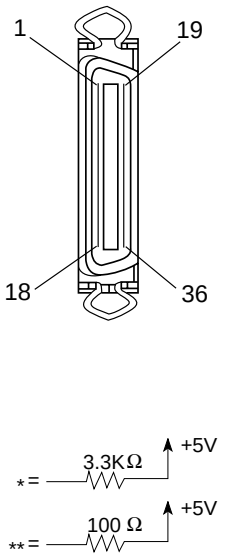

Serial connector (RS-232C)

Signal number	Terminal number		Signal number
NC	25	13	NC
NC	24	12	NC
NC	23	11	NC
NC	22	10	NC
NC	21	9	NC
DTR	20	8	NC
NC	19	7	SG
NC	18	6	DSR
NC	17	5	CTS
NC	16	4	RTS
NC	15	3	RXD
NC	14	2	TXD
		1	FG

Pin connection

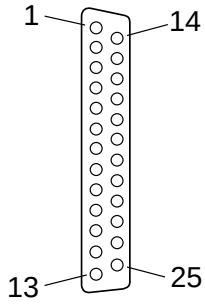

External output connector

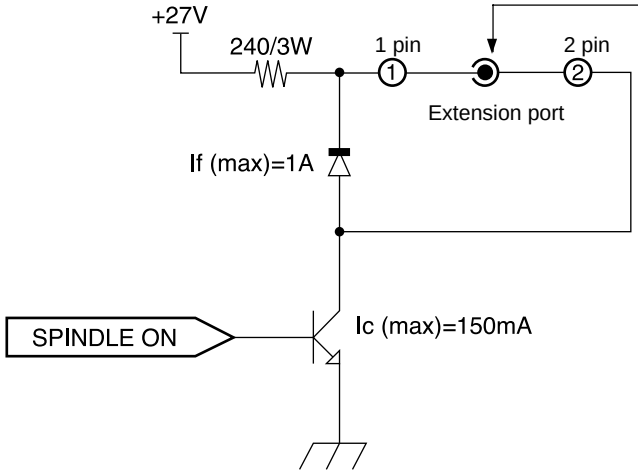

This circuit is activated when the spindle motor is in operation.

NOTICE

Use within the rated range shown above.

Do not apply voltage greater than 25 V to the terminal.

Do not short the terminal to ground.

Compatible plug

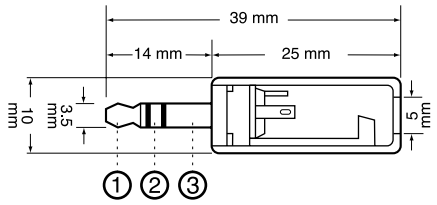

Use only a triple-contact plug of the size described above.

NOTICE Do not use terminal (3). Use only terminals (1) and (2).

No responsible is assumed for effects to which any equipment connected to this external output connector is subjected.

Index

Please read this agreement carefully before opening the sealed package or the sealed disk package

Opening the sealed package or sealed disk package implies your acceptance of the terms and conditions of this agreement. If you do NOT accept this agreement, retain the package UNOPENED. (This product is just one of included items. Please be aware that any amount of the purchase price will not be refunded for return of this product as a single item, regardless of whether the package is opened or unopened.) The enclosed Roland product is a single user version.

Roland License Agreement

Roland DG Corporation ("Roland") grants you a non-assignable and non-exclusive right to use the COMPUTER PROGRAMS in this package ("Software") under this agreement with the following terms and conditions.

1. Coming into Force

This agreement comes into force when you purchase and open the sealed package or sealed disk package.
The effective date of this agreement is the date when you open the sealed package or sealed disk package.

2. Property

Copyright and property of this Software, logo, name, manual and all literature for this Software belong to Roland and its licenser.

The followings are prohibited :
(1) Unauthorized copying the Software or any of its support file, program module or literature.
(2) Reverse engineering, disassembling, decompiling or any other attempt to discover the source code of the Software.

3. Bounds of License

Roland does not grant you to sub-license, rent, assign or transfer the right granted under this agreement nor the Software itself (including the accompanying items) to any third party.
You may not provide use of the Software through time-sharing service and/or network system to any third party who is not individually licensed to use this Software.

You may use the Software by one person with using a single computer in which the Software is installed.

4. Reproduction

You may make one copy of the Software only for back-up purpose. The property of the copied Software belongs to Roland.
You may install the Software into the hard disk of a single computer.

5. Cancellation

Roland retains the right to terminate this agreement without notice immediately when any of followings occurs :
(1) When you violate any article of this agreement.
(2) When you make any serious breach of faith regarding this agreement.

6. Limitations on Liability

Roland may change the specifications of this Software or its material without notice.

Roland shall not be liable for any damage that may caused by the use of the Software or by exercise of the right licensed by this agreement.

7. Governing Law

This agreement is governed by the laws of Japan, and the parties shall submit to the exclusive jurisdiction of the Japanese Court.